Configuration and Use Manual
MMI-20019053, Rev AB
March 2018

Micro Motion® Model 2700 Transmitters with Configurable Input/Outputs

Configuration and Use Manual

MICRO MOTION™

EMERSON™

Safety messages

Safety messages are provided throughout this manual to protect personnel and equipment. Read each safety message carefully before proceeding to the next step.

Other information

Full product specifications can be found in the product data sheet. Troubleshooting information can be found in the configuration manual. Product data sheets and manuals are available from the Micro Motion web site at *www.emerson.com*.

Return policy

Follow Micro Motion procedures when returning equipment. These procedures ensure legal compliance with government transportation agencies and help provide a safe working environment for Micro Motion employees. Micro Motion will not accept your returned equipment if you fail to follow Micro Motion procedures.

Return procedures and forms are available on our web support site at *www.emerson.com*, or by phoning the Micro Motion Customer Service department.

Emerson Flow customer service

Email:

- Worldwide: *flow.support@emerson.com*
- Asia-Pacific: *APflow.support@emerson.com*

Telephone:

North and South America		**Europe and Middle East**		**Asia Pacific**	
United States	800-522-6277	U.K.	0870 240 1978	Australia	800 158 727
Canada	+1 303-527-5200	The Netherlands	+31 (0) 704 136 666	New Zealand	099 128 804
Mexico	+41 (0) 41 7686 111	France	0800 917 901	India	800 440 1468
Argentina	+54 11 4837 7000	Germany	0800 182 5347	Pakistan	888 550 2682
Brazil	+55 15 3413 8000	Italy	8008 77334	China	+86 21 2892 9000
		Central & Eastern	+41 (0) 41 7686 111	Japan	+81 3 5769 6803
		Russia/CIS	+7 495 981 9811	South Korea	+82 2 3438 4600
		Egypt	0800 000 0015	Singapore	+65 6 777 8211
		Oman	800 70101	Thailand	001 800 441 6426
		Qatar	431 0044	Malaysia	800 814 008
		Kuwait	663 299 01		
		South Africa	800 991 390		
		Saudi Arabia	800 844 9564		
		UAE	800 0444 0684		

Contents

Part I Getting started

Chapter 1 Before you begin 3
1.1 About this manual 3
1.2 Transmitter model code 3
1.3 Communications tools and protocols 4
1.4 Additional documentation and resources 4

Chapter 2 Quick start 7
2.1 Power up the transmitter 7
2.2 Check meter status 7
2.2.1 Transmitter status reported by LED 8
2.3 Make a startup connection to the transmitter 9
2.4 Verify mass flow measurement 9
2.5 Verify the zero 9
2.5.1 Terminology used with zero verification and zero calibration 10

Part II Configuration and commissioning

Chapter 3 Introduction to configuration and commissioning 15
3.1 Configuration flowchart 15
3.2 Default values and ranges 16
3.3 Enable access to the off-line menu of the display 17
3.4 Disable write-protection on the transmitter configuration 17
3.5 Restore the factory configuration 18

Chapter 4 Configure process measurement 19
4.1 Configure mass flow measurement 19
4.1.1 Configure Mass Flow Measurement Unit 19
4.1.2 Configure Flow Damping 22
4.1.3 Configure Mass Flow Cutoff 23
4.2 Configure volume flow measurement for liquid applications 24
4.2.1 Configure Volume Flow Type for liquid applications 25
4.2.2 Configure Volume Flow Measurement Unit for liquid applications 25
4.2.3 Configure Volume Flow Cutoff 28
4.3 Configure GSV flow measurement 30
4.3.1 Configure Volume Flow Type for gas applications 30
4.3.2 Configure Standard Density of Gas 30
4.3.3 Configure Gas Standard Volume Flow Unit 32
4.3.4 Configure Gas Standard Volume Flow Cutoff 35
4.4 Configure Flow Direction 36
4.4.1 Options for Flow Direction 37
4.5 Configure density measurement 42
4.5.1 Configure Density Measurement Unit 42
4.5.2 Configure two-phase flow parameters 43

4.5.3 Configure Density Damping 45
4.5.4 Configure Density Cutoff 46
4.6 Configure temperature measurement 47
4.6.1 Configure Temperature Measurement Unit 47
4.6.2 Configure Temperature Damping 48
4.6.3 Effect of Temperature Damping on process measurement 48
4.7 Configure the petroleum measurement application 49
4.7.1 Configure petroleum measurement using ProLink III 49
4.7.2 Set up temperature data for petroleum measurement using ProLink III 51
4.7.3 Configure petroleum measurement using the Field Communicator 52
4.7.4 API tables supported by the petroleum measurement application 53
4.8 Set up concentration measurement 55
4.8.1 Configure concentration measurement using ProLink III 55
4.8.2 Configure concentration measurement using the Field Communicator 58
4.8.3 Standard matrices for the concentration measurement application 60
4.8.4 Derived variables and calculated process variables 61
4.9 Configure pressure compensation 62
4.9.1 Configure pressure compensation using ProLink III 62
4.9.2 Configure pressure compensation using the Field Communicator 64
4.9.3 Options for Pressure Measurement Unit 65

Chapter 5 Configure device options and preferences 67
5.1 Configure the transmitter display 67
5.1.1 Configure the language used for the display 67
5.1.2 Configure the process variables and diagnostic variables shown on the display 67
5.1.3 Configure the number of decimal places (precision) shown on the display 69
5.1.4 Configure the refresh rate of data shown on the display 70
5.1.5 Enable or disable automatic scrolling through the display variables 70
5.1.6 Enable or disable the display backlight 71
5.1.7 Enable or disable Status LED Blinking 71
5.2 Enable or disable operator actions from the display 72
5.2.1 Enable or disable Totalizer Start/Stop from the display 72
5.2.2 Enable or disable Totalizer Reset from the display 73
5.2.3 Enable or disable the Acknowledge All Alerts display command 73
5.3 Configure security for the display menus 74
5.4 Configure response time parameters 75
5.4.1 Configure Update Rate 76
5.4.2 Configure Response Time 78
5.5 Configure alert handling 78
5.5.1 Configure Fault Timeout 79
5.5.2 Configure Status Alert Severity 79
5.6 Configure informational parameters 83
5.6.1 Configure Sensor Serial Number 83
5.6.2 Configure Sensor Material 84
5.6.3 Configure Sensor Liner Material 84
5.6.4 Configure Sensor Flange Type 84
5.6.5 Configure Descriptor 85
5.6.6 Configure Message 85
5.6.7 Configure Date 86

Chapter 6 Integrate the meter with the control system 87
6.1 Configure the transmitter channels 87
6.2 Configure the mA Output 89

6.2.1 Configure mA Output Process Variable 89
6.2.2 Configure Lower Range Value (LRV) and Upper Range Value (URV) 92
6.2.3 Configure AO Cutoff 94
6.2.4 Configure Added Damping 95
6.2.5 Configure mA Output Fault Action and mA Output Fault Level 97
6.3 Configure the Frequency Output 98
6.3.1 Configure Frequency Output Process Variable 99
6.3.2 Configure Frequency Output Polarity 100
6.3.3 Configure Frequency Output Scaling Method 101
6.3.4 Configure Frequency Output Mode 102
6.3.5 Configure Frequency Output Fault Action and Frequency Output Fault Level 103
6.4 Configure the Discrete Output 105
6.4.1 Configure Discrete Output Source 105
6.4.2 Configure Discrete Output Polarity 107
6.4.3 Configure Discrete Output Fault Action 109
6.5 Configure the Discrete Input 110
6.5.1 Configure Discrete Input Action 110
6.5.2 Configure Discrete Input Polarity 111
6.6 Configure events 112
6.6.1 Configure a basic event 113
6.6.2 Configure an enhanced event 113
6.7 Configure digital communications 115
6.7.1 Configure HART/Bell 202 communications 116
6.7.2 Configure Digital Communications Fault Action 122

Chapter 7 Complete the configuration 125
7.1 Test or tune the system using sensor simulation 125
7.1.1 Sensor simulation 126
7.2 Back up transmitter configuration 127
7.3 Enable write-protection on the transmitter configuration 127

Chapter 8 Set up the Weights & Measures application 129
8.1 Weights & Measures application 129
8.2 Set up the Weights & Measures application using ProLink III 130

Part III Operations, maintenance, and troubleshooting

Chapter 9 Transmitter operation 135
9.1 Record the process variables 135
9.2 View process variables 136
9.2.1 View process variables using the display 136
9.2.2 View process variables and other data using ProLink III 137
9.2.3 View process variables using the Field Communicator 137
9.3 View transmitter status using the status LED 138
9.4 View and acknowledge status alerts 139
9.4.1 View and acknowledge alerts using the display 139
9.4.2 View and acknowledge alerts using ProLink III 141
9.4.3 View alerts using the Field Communicator 142
9.4.4 Alert data in transmitter memory 142
9.5 Read totalizer and inventory values 143
9.6 Start and stop totalizers and inventories 143
9.6.1 Start and stop totalizers and inventories using the display 144

9.7 Reset totalizers 145
9.7.1 Reset totalizers using the display 145
9.8 Reset inventories 146

Chapter 10 Operate the transmitter with the Weights & Measures application 149
10.1 Operate the transmitter when the Weights & Measures application is installed 149
10.1.1 Approved methods to read or obtain process data 150
10.1.2 Large totalizer values on the display (OIML applications only) 150
10.1.3 Effect of the Weights & Measures application on process measurement and outputs 151
10.1.4 Effect of the Weights & Measures application on operation and maintenance functions 152
10.2 Switch between secured and unsecured mode 154
10.2.1 Switch between secured and unsecured mode using ProLink III 155
10.2.2 Switch between secured and unsecured mode using the switching utility 155
10.3 Clear Status Alarm A027: Security Breach 156
10.4 Replacing the core processor in a Weights & Measures installation 156

Chapter 11 Measurement support 157
11.1 Options for measurement support 157
11.2 Use Smart Meter Verification (SMV) 158
11.2.1 SMV requirements 158
11.2.2 SMV test preparation 158
11.2.3 Run SMV 159
11.2.4 View test data 163
11.2.5 Schedule automatic execution of the SMV test 167
11.3 Use PVR, TBR, and TMR 170
11.3.1 PVR, TBR, and TMR applications 171
11.4 Piecewise linearization (PWL) for calibrating gas meters 172
11.5 Use the fuel consumption application 172
11.5.1 Fuel consumption application architecture 172
11.6 Zero the meter 173
11.7 Validate the meter 174
11.7.1 Alternate method for calculating the meter factor for volume flow 176
11.8 Perform a (standard) D1 and D2 density calibration 176
11.8.1 Perform a D1 and D2 density calibration using ProLink III 177
11.8.2 Perform a D1 and D2 density calibration using the Field Communicator 178
11.9 Perform a D3 and D4 density calibration (T-Series sensors only) 179
11.9.1 Perform a D3 or D3 and D4 density calibration using ProLink III 180
11.9.2 Perform a D3 or D3 and D4 density calibration using the Field Communicator 181
11.10 Perform temperature calibration 182
11.10.1 Perform temperature calibration using the display 183
11.10.2 Perform temperature calibration using ProLink III 183
11.10.3 Perform temperature calibration using the Field Communicator 185

Chapter 12 Troubleshooting 187
12.1 Status LED states 188
12.2 Status alerts, causes, and recommendations 189
12.3 Locate a device using the HART 7 Squawk feature 200
12.4 Flow measurement problems 200
12.5 Density measurement problems 202
12.6 Temperature measurement problems 203
12.7 Milliamp output problems 204

12.8 Frequency Output problems 206
12.9 Discrete output problems 207
12.10 Discrete Input problems 207
12.11 Using sensor simulation for troubleshooting 207
12.12 Check power supply wiring 208
12.13 Check sensor-to-transmitter wiring 209
12.14 Check grounding 209
12.15 Perform loop tests 210
12.15.1 Perform loop tests using the display 210
12.15.2 Perform loop tests using ProLink III 212
12.15.3 Perform loop tests using the Field Communicator 214
12.16 Trim mA output 215
12.16.1 Trim mA output using ProLink III 215
12.16.2 Trim mA outputs using the Field Communicator 216
12.17 Check the HART communication loop 216
12.18 Check HART Address and mA Output Action 217
12.19 Check HART burst mode 218
12.20 Check Lower Range Value and Upper Range Value 218
12.21 Check mA Output Fault Action 218
12.22 Check for radio frequency interference (RFI) 218
12.23 Check Frequency Output Mode 219
12.24 Check Frequency Output Scaling Method 219
12.25 Check Frequency Output Fault Action 219
12.26 Check Flow Direction 220
12.27 Check the cutoffs 220
12.28 Check for two-phase flow (slug flow) 220
12.29 Check the drive gain 221
12.29.1 Collect drive gain data 222
12.30 Check the pickoff voltage 222
12.30.1 Collect pickoff voltage data 223
12.31 Check for internal electrical problems 224
12.31.1 Check the sensor coils 224
12.32 Check the core processor LED 226
12.32.1 Core processor LED states 229
12.33 Perform a 700 core processor resistance test 231

Appendices and reference

Appendix A Using the transmitter display 235
A.1 Components of the transmitter interface 235
A.2 Use the optical switches 236
A.3 Access and use the display menu system 237
A.3.1 Enter a floating-point value using the display 238
A.4 Display codes for process variables 241
A.5 Codes and abbreviations used in display menus 242

Appendix B Using ProLink III with the transmitter 247
B.1 Basic information about ProLink III 247
B.2 Connect with ProLink III 248
B.2.1 Connection types supported by ProLink III 248
B.2.2 Connect with ProLink III to the service port 249
B.2.3 Make a HART/Bell 202 connection 250

Appendix C Using a Field Communicator with the transmitter 257
C.1 Basic information about the Field Communicator 257
C.2 Connect with the Field Communicator 258
Appendix D Default values and ranges 261
D.1 Default values and ranges 261
Appendix E Transmitter components and installation wiring 267
E.1 Installation types 267
E.2 Power supply terminals and ground 270
E.3 Input/output (I/O) wiring terminals 271
Appendix F NE 53 history 273
F.1 NE 53 history 273

Part I
Getting started

Chapters covered in this part:

- *Before you begin*
- *Quick start*

1 Before you begin

Topics covered in this chapter:

- *About this manual*
- *Transmitter model code*
- *Communications tools and protocols*
- *Additional documentation and resources*

1.1 About this manual

This manual helps you configure, commission, use, maintain, and troubleshoot Micro Motion Model 2700 transmitters with configurable inputs and outputs.

Important

This manual assumes that the following conditions apply:

- The transmitter has been installed correctly and completely according to the instructions in the transmitter installation manual
- The installation complies with all applicable safety requirements
- The user is trained in local and corporate safety standards

1.2 Transmitter model code

You can verify that this manual pertains to your transmitter by ensuring the model code on the transmitter tag matches the format.

Example:

The transmitter has a model number of the following form:
2700(R/I/E/B/C/M/P/H)**(B/C)******

- Mounting options

  R 4-wire remote-mount with aluminum housing

  I Integral mount

  E 4-wire remote mount transmitter with 9-wire remote enhanced core processor

  B 4-wire remote mount transmitter with 9-wire remote core processor

  C 9-wire remote-mount with integral core processor and aluminum housing

  M 4-wire remote mount with stainless steel housing

  P 9-wire remote mount transmitter with integral core processor and stainless steel housing

  H 4-wire remote mount for connecting to CDM/FDM/FVM meters

- Output options board
  - **B** Configurable input/outputs option board, default configuration (two mA outputs, one frequency output)
  - **C** Configurable input/outputs option board, custom configuration

1.3 Communications tools and protocols

You can use several different communications tools and protocols to interface with the transmitter, use different tools in different locations, or use different tools for different tasks.

Tool	Supported protocols
ProLink III	• HART/Bell 202 • Service port
Field Communicator	HART/Bell 202

For information about how to use the communication tools, see the appendices in this manual.

Tip

You may be able to use other communications tools, such as AMS Suite: Intelligent Device Manager, or the Smart Wireless THUM™ Adapter. Use of AMS or the Smart Wireless THUM Adapter is not discussed in this manual. For more information on the Smart Wireless THUM Adapter, refer to the documentation available at *www.emerson.com*.

1.4 Additional documentation and resources

Topic	Document
Fuel consumption	*Micro Motion Fuel Consumption Application for Transmitters Supplement*
Hazardous area installation	See the approval documentation shipped with the transmitter, or download the appropriate documentation at *www.emerson.com*.
Product Data Sheet	*Micro Motion Series 1000 and Series 2000 Transmitters with MVD™ Technology Product Data Sheet*
Production Volume Reconciliation (PVR), Transient Bubble Remediation (TBR), and Transient Mist Remediation (TMR) applications	*Micro Motion Oil and Gas Production Supplement*
Sensor	Sensor documentation

Topic	Document
Transmitter installation	*Micro Motion® Model 1700 and 2700 Installation Manual*

All documentation resources are available at *www.emerson.com* or on the user documentation DVD.

2 Quick start

Topics covered in this chapter:

- *Power up the transmitter*
- *Check meter status*
- *Make a startup connection to the transmitter*
- *Verify mass flow measurement*
- *Verify the zero*

2.1 Power up the transmitter

The transmitter must be powered up for all configuration and commissioning tasks, or for process measurement.

1. Ensure that all transmitter and sensor covers and seals are closed.

   ⚠ **DANGER!**

   To prevent ignition of flammable or combustible atmospheres, ensure that all covers and seals are tightly closed. For hazardous area installations, applying power while housing covers are removed or loose can cause an explosion.

2. Turn on the electrical power at the power supply.

   The transmitter will automatically perform diagnostic routines. The transmitter is self-switching and will automatically detect the supply voltage. When using DC power, a minimum of 1.5 amps of startup current is required. During this period, Alert 009 is active. The diagnostic routines should complete in approximately 30 seconds. For transmitters with a display, the status LED will turn green and begin to flash when the startup diagnostics are complete. If the status LED exhibits different behavior, an alert is active.

Postrequisites

Although the sensor is ready to receive process fluid shortly after power-up, the electronics can take up to 10 minutes to reach thermal equilibrium. Therefore, if this is the initial startup, or if power has been off long enough to allow components to reach ambient temperature, allow the electronics to warm up for approximately 10 minutes before relying on process measurements. During this warm-up period, you may observe minor measurement instability or inaccuracy.

2.2 Check meter status

Check the meter for any error conditions that require user action or that affect measurement accuracy.

1. Wait approximately 10 seconds for the power-up sequence to complete.

   Immediately after power-up, the transmitter runs through diagnostic routines and checks for error conditions. During the power-up sequence, Alert A009 is active. This alert should clear automatically when the power-up sequence is complete.

2. Check the status LED on the transmitter.

Related information

View and acknowledge status alerts

2.2.1 Transmitter status reported by LED

Table 2-1: Transmitter status reported by status LED

LED state	Description	Recommendation
Solid green	No alerts are active.	Continue with configuration or process measurement.
Flashing green (if enabled)	Unacknowledged corrected condition (no alert)	Continue with configuration or process measurement. Acknowledge the alert if you choose.
Solid yellow	One or more low-severity alerts are active.	A low-severity alert condition does not affect measurement accuracy or output behavior. You can continue with configuration or process measurement, but Micro Motion still recommends identifying and resolving the alert condition.
Flashing yellow (if enabled)	Calibration in progress, or Known Density Verification in progress. One or more low-severity alerts are active and have not been acknowledged.	A low-severity alert condition does not affect measurement accuracy or output behavior. You can continue with configuration or process measurement, but Micro Motion still recommends identifying and resolving the alert condition.
Solid red	One or more high-severity alerts are active.	A high-severity alert condition affects measurement accuracy and output behavior. Resolve the alert condition before continuing.
Flashing red (if enabled)	One or more high-severity alerts are active and have not been acknowledged.	A high-severity alert condition affects measurement accuracy and output behavior. Resolve the alert condition before continuing. Acknowledge the alert if you choose.

If **Status LED Blinking** is disabled, all LEDs will show a solid color rather than flashing.

2.3 Make a startup connection to the transmitter

For all configuration tools except the display, you must have an active connection to the transmitter to configure the transmitter.

Identify the connection type to use, and follow the instructions for that connection type in the appropriate appendix.

Communications tool	Connection type to use	Instructions
ProLink III	Service port	*Appendix B*
Field Communicator	HART	*Appendix C*

2.4 Verify mass flow measurement

Check to see that the mass flow rate reported by the transmitter is accurate. You can use any available method.

- Read the value for **Mass Flow Rate** on the transmitter display.
- Connect to the transmitter with ProLink III and read the value for **Mass Flow Rate** in the Process Variables panel.
- Connect to the transmitter with the Field Communicator and read the value for **Mass Flow Rate**.

  On-Line Menu > **Overview** > **Primary Purpose Variables**

Postrequisites

If the reported mass flow rate is not accurate:

- Check the characterization parameters.
- Review the troubleshooting suggestions for flow measurement issues.

2.5 Verify the zero

Verifying the zero helps you determine if the stored zero value is appropriate to your installation, or if a field zero can improve measurement accuracy.

The zero verification procedure analyzes the Live Zero value under conditions of zero flow, and compares it to the Zero Stability range for the sensor. If the average Live Zero value is within a reasonable range, the zero value stored in the transmitter is valid. Performing a field calibration will not improve measurement accuracy.

Important

In most cases, the factory zero is more accurate than the field zero. Do not zero the meter unless one of the following is true:

- The zero is required by site procedures.
- The stored zero value fails the zero verification procedure.

Procedure

1. Allow the flowmeter to warm up for at least 20 minutes after applying power.
2. Run the process fluid through the sensor until the sensor temperature reaches the normal process operating temperature.
3. Stop flow through the sensor by shutting the downstream valve, and then the upstream valve if available.
4. Verify that the sensor is blocked in, that flow has stopped, and that the sensor is completely full of process fluid.
5. From ProLink III, choose **Device Tools** > **Calibration** > **Zero Verification and Calibration** > **Verify Zero** and wait until the procedure completes.
6. Observe the drive gain, temperature, and density readings. If they are stable, check the **Live Zero** or **Field Verification Zero** value. If the average value is close to 0, you should not need to zero the meter.
7. If the zero verification procedure fails:
   a. Confirm that the sensor is completely blocked in, that flow has stopped, and that the sensor is completely full of process fluid.
   b. Verify that the process fluid is not flashing or condensing, and that it does not contain particles that can settle out.
   c. Remove or reduce sources of electromechanical noise if appropriate.
   d. Repeat the zero verification procedure.
   e. If it fails again, zero the meter.

Postrequisites

Restore normal flow through the sensor by opening the valves.

Related information

Zero the meter

2.5.1 Terminology used with zero verification and zero calibration

Term	Definition
Zero	In general, the offset required to synchronize the left pickoff and the right pickoff under conditions of zero flow. Unit = microseconds.
Factory Zero	The zero value obtained at the factory, under laboratory conditions.
Field Zero	The zero value obtained by performing a zero calibration outside the factory.

Term	Definition
Prior Zero	The zero value stored in the transmitter at the time a field zero calibration is begun. May be the factory zero or a previous field zero.
Manual Zero	The zero value stored in the transmitter, typically obtained from a zero calibration procedure. It may also be configured manually. Also called “mechanical zero” or “stored zero”.
Live Zero	The real-time bidirectional mass flow rate with no flow damping or mass flow cutoff applied. An adaptive damping value is applied only when the mass flow rate changes dramatically over a very short interval. Unit = configured mass flow measurement unit.
Zero Stability	A laboratory-derived value used to calculate the expected accuracy for a sensor. Under laboratory conditions at zero flow, the average flow rate is expected to fall within the range defined by the Zero Stability value (0 ± Zero Stability). Each sensor size and model has a unique Zero Stability value. Statistically, 95% of all data points should fall within the range defined by the Zero Stability value.
Zero Calibration	The procedure used to determine the zero value.
Zero Time	The time period over which the Zero Calibration procedure is performed. Unit = seconds.
Field Verification Zero	A 3-minute running average of the Live Zero value, calculated by the transmitter. Unit = configured mass flow measurement unit.
Zero Verification	A procedure used to evaluate the stored zero and determine whether or not a field zero can improve measurement accuracy.

Part II
Configuration and commissioning

Chapters covered in this part:

- *Introduction to configuration and commissioning*
- *Configure process measurement*
- *Configure device options and preferences*
- *Integrate the meter with the control system*
- *Complete the configuration*
- *Set up the Weights & Measures application*

3 Introduction to configuration and commissioning

Topics covered in this chapter:

- *Configuration flowchart*
- *Default values and ranges*
- *Enable access to the off-line menu of the display*
- *Disable write-protection on the transmitter configuration*
- *Restore the factory configuration*

3.1 Configuration flowchart

Use the following flowchart as a general guide to the configuration and commissioning process.

Some options may not apply to your installation. Detailed information is provided in the remainder of this manual. If you are using the Weights & Measures application, additional configuration and setup are required.

Figure 3-1: Configuration flowchart

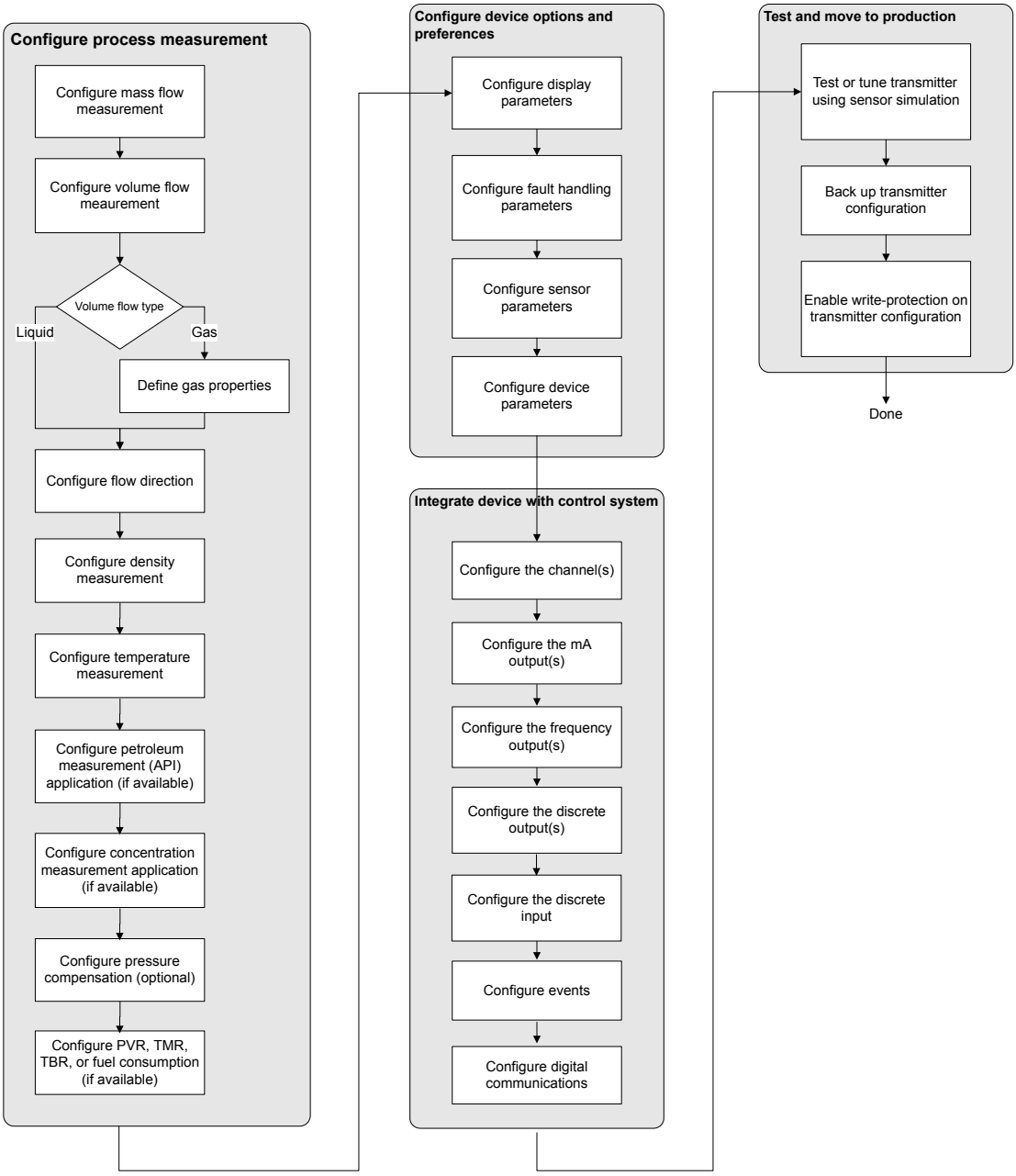

3.2 Default values and ranges

See *Section D.1* to view the default values and ranges for the most commonly used parameters.

3.3 Enable access to the off-line menu of the display

Display	OFF-LINE MAINT > OFF-LINE CONFG > DISPLAY
ProLink III	Device Tools > Configuration > Transmitter Display > Display Security
Field Communicator	Configure > Manual Setup > Display > Offline Variable Menu Features

Overview

By default, access to the off-line menu of the display is enabled. If it is disabled, you must enable it if you want to use the display to configure the transmitter.

Restriction

You cannot use the display to enable access to the off-line menu. You must make a connection from another tool.

3.4 Disable write-protection on the transmitter configuration

Display	OFF-LINE MAINT > CONFG > LOCK
ProLink III	Device Tools > Configuration > Write-Protection
Field Communicator	Configure > Manual Setup > Info Parameters > Transmitter Info > Write Protect

Overview

If the transmitter is write-protected, the configuration is locked and you must unlock it before you can change any configuration parameters. By default, the transmitter is not write-protected.

Tip

Write-protecting the transmitter prevents accidental changes to configuration. It does not prevent normal operational use. You can always disable write-protection, perform any required configuration changes, then re-enable write-protection.

3.5 Restore the factory configuration

Display	Not available
ProLink III	**Device Tools** > **Configuration Transfer** > **Restore Factory Configuration**
Field Communicator	**Service Tools** > **Maintenance** > **Reset/Restore** > **Restore Factory Configuration**

Overview

Restoring the factory configuration returns the transmitter to a known operational configuration. This may be useful if you experience problems during configuration.

Important

You cannot restore factory configurations with a 700 core.

Tip

Restoring the factory configuration is not a common action. You may want to contact customer support to see if there is a preferred method to resolve any issues.

4 Configure process measurement

Topics covered in this chapter:

- *Configure mass flow measurement*
- *Configure volume flow measurement for liquid applications*
- *Configure GSV flow measurement*
- *Configure Flow Direction*
- *Configure density measurement*
- *Configure temperature measurement*
- *Configure the petroleum measurement application*
- *Set up concentration measurement*
- *Configure pressure compensation*

4.1 Configure mass flow measurement

The mass flow measurement parameters control how mass flow is measured and reported.

4.1.1 Configure Mass Flow Measurement Unit

Display	OFF-LINE MAINT > OFF-LINE CONFG > UNITS > MASS
ProLink III	Device Tools > Configuration > Process Measurement > Flow
Field Communicator	Configure > Manual Setup > Measurements > Flow > Mass Flow Unit

Overview

Mass Flow Measurement Unit specifies the unit of measure that will be used for the mass flow rate. The unit used for mass total and mass inventory is derived from this unit.

You can configure the mA and Frequency Outputs independently. For example, you can configure the mA Output for mass flow and the Frequency Output for liquid volume or gas standard volume. If the same process variable is assigned to both the mA and Frequency Outputs, then any selected measurement unit, (mass, volume or gas standard volume), is automatically applied to both outputs.

Procedure

Set **Mass Flow Measurement Unit** to the unit you want to use.

The default setting for **Mass Flow Measurement Unit** is g/sec (grams per second).

Tip

If the measurement unit you want to use is not available, you can define a special measurement unit.

Options for Mass Flow Measurement Unit

The transmitter provides a standard set of measurement units for **Mass Flow Measurement Unit**, plus one user-defined special measurement unit. Different communications tools may use different labels for the units.

Unit description	Label		
	Display	**ProLink III**	**Field Communicator**
Grams per second	G/S	g/sec	g/s
Grams per minute	G/MIN	g/min	g/min
Grams per hour	G/H	g/hr	g/h
Kilograms per second	KG/S	kg/sec	kg/s
Kilograms per minute	KG/MIN	kg/min	kg/min
Kilograms per hour	KG/H	kg/hr	kg/h
Kilograms per day	KG/D	kg/day	kg/d
Metric tons per minute	T/MIN	mTon/min	MetTon/min
Metric tons per hour	T/H	mTon/hr	MetTon/h
Metric tons per day	T/D	mTon/day	MetTon/d
Pounds per second	LB/S	lbs/sec	lb/s
Pounds per minute	LB/MIN	lbs/min	lb/min
Pounds per hour	LB/H	lbs/hr	lb/h
Pounds per day	LB/D	lbs/day	lb/d
Short tons (2000 pounds) per minute	ST/MIN	sTon/min	STon/min
Short tons (2000 pounds) per hour	ST/H	sTon/hr	STon/h
Short tons (2000 pounds) per day	ST/D	sTon/day	STon/d
Long tons (2240 pounds) per hour	LT/H	lTon/hr	LTon/h
Long tons (2240 pounds) per day	LT/D	lTon/day	LTon/d
Special unit	SPECL	special	Spcl

Define a special measurement unit for mass flow

Display	Not available
ProLink III	**Device Tools** > **Configuration** > **Process Measurement** > **Flow** > **Special Units**
Field Communicator	**Configure** > **Manual Setup** > **Measurements** > **Special Units** > **Mass Special Units**

Overview

A special measurement unit is a user-defined unit of measure that allows you to report process data, totalizer data, and inventory data in a unit that is not available in the transmitter. A special measurement unit is calculated from an existing measurement unit using a conversion factor.

Note

Although you cannot define a special measurement unit using the display, you can use the display to select an existing special measurement unit, and to view process data using the special measurement unit.

Procedure

1. Specify **Base Mass Unit**.

   Base Mass Unit is the existing mass unit that the special unit will be based on.
2. Specify **Base Time Unit**.

   Base Time Unit is the existing time unit that the special unit will be based on.
3. Calculate **Mass Flow Conversion Factor** as follows:

   a. x base units = y special units

   b. **Mass Flow Conversion Factor** = x ÷ y

      The original mass flow rate value is divided by this value.
4. Enter **Mass Flow Conversion Factor**.
5. Set **Mass Flow Label** to the name you want to use for the mass flow unit.
6. Set **Mass Total Label** to the name you want to use for the mass total and mass inventory unit.

The special measurement unit is stored in the transmitter. You can configure the transmitter to use the special measurement unit at any time.

Example: Defining a special measurement unit for mass flow

You want to measure mass flow in ounces per second (oz/sec).

1. Set **Base Mass Unit** to Pounds (lb).
2. Set **Base Time Unit** to Seconds (sec).
3. Calculate **Mass Flow Conversion Factor**:

a. 1 lb/sec = 16 oz/sec

b. **Mass Flow Conversion Factor** = 1 ÷ 16 = 0.0625

4. Set **Mass Flow Conversion Factor** to 0.0625.
5. Set **Mass Flow Label** to oz/sec.
6. Set **Mass Total Label** to oz.

4.1.2 Configure Flow Damping

Display	Not available
ProLink III	**Device Tools** > **Configuration** > **Process Measurement** > **Flow**
Field Communicator	**Configure** > **Manual Setup** > **Measurements** > **Flow** > **Flow Damping**

Overview

Damping is used to smooth out small, rapid fluctuations in process measurement. **Damping Value** specifies the time period (in seconds) over which the transmitter will spread changes in the process variable. At the end of the interval, the internal value will reflect 63% of the change in the actual measured value.

Procedure

Set **Flow Damping** to the value you want to use.

The default value is 0.8 seconds. The range depends on the core processor type and the setting of **Update Rate**, as shown in the following table.

Update Rate setting	Damping range
Normal	0 to 51.2 seconds
Special	0 to 40.96 seconds

The value you enter is automatically rounded off to the nearest valid value. For example, if the damping is currently set to 0.8 seconds, any value entered up to 1.2 seconds will be rounded down to 0.8 seconds, and any value entered from 1.21 to 1.59 seconds will be rounded up to 1.6 seconds.

Update Rate setting	Valid damping values
Normal	0.0, 0.2, 0.4, 0.8, 1.6, 3.2, 6.4, 12.8, 25.6, 51.2
Special	0.0, 0.04, 0.08, 0.16, 0.32, 0.64, 1.28, 2.56, 5.12, 10.24, 20.48, 40.96

Effect of flow damping on volume measurement

Flow damping affects volume measurement for liquid volume data. Flow damping also affects volume measurement for gas standard volume data. The transmitter calculates volume data from the damped mass flow data.

Interaction between Flow Damping and mA Output Damping

In some circumstances, both **Flow Damping** and **mA Output Damping** are applied to the reported mass flow value.

Flow Damping controls the rate of change in flow process variables. **mA Output Damping** controls the rate of change reported via the mA Output. If **mA Output Process Variable** is set to Mass Flow Rate, and both **Flow Damping** and **mA Output Damping** are set to non-zero values, flow damping is applied first, and the added damping calculation is applied to the result of the first calculation.

4.1.3 Configure Mass Flow Cutoff

Display	Not available
ProLink III	**Device Tools** > **Configuration** > **Process Measurement** > **Flow**
Field Communicator	**Configure** > **Manual Setup** > **Measurements** > **Flow** > **Mass Flow Cutoff**

Overview

Mass Flow Cutoff specifies the lowest mass flow rate that will be reported as measured. All mass flow rates below this cutoff will be reported as 0.

Procedure

Set **Mass Flow Cutoff** to the value you want to use.

The default value for **Mass Flow Cutoff** is 0.0 g/sec or a sensor-specific value set at the factory. The recommended value is 0.5% of the nominal flow rate of the attached sensor. See the sensor specifications. Leaving **Mass Flow Cutoff** at 0.0 g/sec is not recommended.

Effect of Mass Flow Cutoff on volume measurement

Mass Flow Cutoff does not affect volume measurement. Volume data is calculated from the actual mass data rather than the reported value.

Volume flow has a separate Volume Flow Cutoff that is not affected by the Mass Flow Cutoff value.

Interaction between Mass Flow Cutoff and mA Output Cutoff

Mass Flow Cutoff defines the lowest mass flow value that the transmitter will report as measured. **mA Output Cutoff** defines the lowest flow rate that will be reported via the mA output. If **mA Output Process Variable** is set to Mass Flow Rate, the mass flow rate reported via the mA Output is controlled by the higher of the two cutoff values.

Mass Flow Cutoff affects all reported values and values used in other transmitter behavior (e.g., events defined on mass flow).

mA Output Cutoff affects only mass flow values reported via the mA Output.

Example: Cutoff interaction with mA Output Cutoff lower than Mass Flow Cutoff

Configuration:

- **mA Output Process Variable**: Mass Flow Rate
- **Frequency Output Process Variable**: Mass Flow Rate
- **mA Output Cutoff**: 10 g/sec
- **Mass Flow Cutoff**: 15 g/sec

Result: If the mass flow rate drops below 15 g/sec, mass flow will be reported as 0, and 0 will be used in all internal processing.

Example: Cutoff interaction with mA Output Cutoff higher than Mass Flow Cutoff

Configuration:

- **mA Output Process Variable**: Mass Flow Rate
- **Frequency Output Process Variable**: Mass Flow Rate
- **mA Output Cutoff**: 15 g/sec
- **Mass Flow Cutoff**: 10 g/sec

Result:

- If the mass flow rate drops below 15 g/sec but not below 10 g/sec:
  - The mA Output will report zero flow.
  - The Frequency Output will report the actual flow rate, and the actual flow rate will be used in all internal processing.
- If the mass flow rate drops below 10 g/sec, both outputs will report zero flow, and 0 will be used in all internal processing.

4.2 Configure volume flow measurement for liquid applications

The volume flow measurement parameters control how liquid volume flow is measured and reported.

Restriction

You cannot implement both liquid volume flow and gas standard volume flow at the same time. Choose one or the other.

Note

If you need to switch from gas standard volume to liquid volume, polling for base density will automatically be disabled.

4.2.1 Configure Volume Flow Type for liquid applications

Display	Not available
ProLink III	**Device Tools** > **Configuration** > **Process Measurement** > **Flow**
Field Communicator	**Configure** > **Manual Setup** > **Measurements** > **GSV** > **Volume Flow Type** > **Liquid**

Overview

Volume Flow Type controls whether liquid or gas standard volume flow measurement will be used.

Restriction

Gas standard volume measurement is incompatible with some applications. Set **Volume Flow Type** to Liquid if you are using any of the following applications:

- Petroleum measurement
- Concentration measurement
- Fuel consumption
- Production Volume Reconciliation (PVR)

Procedure

Set **Volume Flow Type** to Liquid.

4.2.2 Configure Volume Flow Measurement Unit for liquid applications

Display	**OFF-LINE MAINT** > **OFF-LINE CONFG** > **UNITS** > **VOL**
ProLink III	**Device Tools** > **Configuration** > **Process Measurement** > **Flow**
Field Communicator	**Configure** > **Manual Setup** > **Measurements** > **Flow** > **Volume Flow Unit**

Overview

Volume Flow Measurement Unit specifies the unit of measurement that will be displayed for the volume flow rate. The unit used for the volume total and volume inventory is based on this unit.

Prerequisites

Before you configure **Volume Flow Measurement Unit**, be sure that **Volume Flow Type** is set to Liquid.

Procedure

Set **Volume Flow Measurement Unit** to the unit you want to use.

The default setting for **Volume Flow Measurement Unit** is l/sec (liters per second).

Tip
If the measurement unit you want to use is not available, you can define a special measurement unit.

Options for Volume Flow Measurement Unit for liquid applications

The transmitter provides a standard set of measurement units for **Volume Flow Measurement Unit**, plus one user-defined measurement unit. Different communications tools may use different labels for the units.

	Label		
Unit description	**Display**	**ProLink III**	**Field Communicator**
Cubic feet per second	CUFT/S	ft3/sec	Cuft/s
Cubic feet per minute	CUF/MN	ft3/min	Cuft/min
Cubic feet per hour	CUFT/H	ft3/hr	Cuft/h
Cubic feet per day	CUFT/D	ft3/day	Cuft/d
Cubic meters per second	M3/S	m3/sec	Cum/s
Cubic meters per minute	M3/MIN	m3/min	Cum/min
Cubic meters per hour	M3/H	m3/hr	Cum/h
Cubic meters per day	M3/D	m3/day	Cum/d
U.S. gallons per second	USGPS	US gal/sec	gal/s
U.S. gallons per minute	USGPM	US gal/min	gal/min
U.S. gallons per hour	USGPH	US gal/hr	gal/h
U.S. gallons per day	USGPD	US gal/day	gal/d
Million U.S. gallons per day	MILG/D	mil US gal/day	MMgal/d
Liters per second	L/S	l/sec	L/s
Liters per minute	L/MIN	l/min	L/min

Unit description	Label		
	Display	ProLink III	Field Communicator
Liters per hour	L/H	l/hr	L/h
Million liters per day	MILL/D	mil l/day	ML/d
Imperial gallons per second	UKGPS	Imp gal/sec	Impgal/s
Imperial gallons per minute	UKGPM	Imp gal/min	Impgal/min
Imperial gallons per hour	UKGPH	Imp gal/hr	Impgal/h
Imperial gallons per day	UKGPD	Imp gal/day	Impgal/d
Barrels per second(1)	BBL/S	barrels/sec	bbl/s
Barrels per minute(1)	BBL/MN	barrels/min	bbl/min
Barrels per hour(1)	BBL/H	barrels/hr	bbl/h
Barrels per day(1)	BBL/D	barrels/day	bbl/d
Beer barrels per second(2)	BBBL/S	Beer barrels/sec	bbbl/s
Beer barrels per minute(2)	BBBL/MN	Beer barrels/min	bbbl/min
Beer barrels per hour(2)	BBBL/H	Beer barrels/hr	bbbl/h
Beer barrels per day(2)	BBBL/D	Beer barrels/day	bbbl/d
Special unit	SPECL	special	Spcl

(1) Unit based on oil barrels (42 U.S. gallons).

(2) Unit based on U.S. beer barrels (31 U.S. gallons).

Define a special measurement unit for volume flow

Display	Not available
ProLink III	**Device Tools** > **Configuration** > **Process Measurement** > **Flow** > **Special Units**
Field Communicator	**Configure** > **Manual Setup** > **Measurements** > **Special Units** > **Volume Special Units**

Overview

A special measurement unit is a user-defined unit of measure that allows you to report process data, totalizer data, and inventory data in a unit that is not available in the transmitter. A special measurement unit is calculated from an existing measurement unit using a conversion factor.

Note

Although you cannot define a special measurement unit using the display, you can use the display to select an existing special measurement unit, and to view process data using the special measurement unit.

Procedure

1. Specify **Base Volume Unit**.

Base Volume Unit is the existing volume unit that the special unit will be based on.

2. Specify **Base Time Unit**.

   Base Time Unit is the existing time unit that the special unit will be based on.

3. Calculate **Volume Flow Conversion Factor** as follows:

   a. x base units = y special units

   b. **Volume Flow Conversion Factor** = x ÷ y

4. Enter **Volume Flow Conversion Factor**.

   The original volume flow rate value is divided by this conversion factor.

5. Set **Volume Flow Label** to the name you want to use for the volume flow unit.
6. Set **Volume Total Label** to the name you want to use for the volume total and volume inventory unit.

The special measurement unit is stored in the transmitter. You can configure the transmitter to use the special measurement unit at any time.

Example: Defining a special measurement unit for volume flow

You want to measure volume flow in pints per second (pints/sec).

1. Set **Base Volume Unit** to Gallons (gal).
2. Set **Base Time Unit** to Seconds (sec).
3. Calculate the conversion factor:

   a. 1 gal/sec = 8 pints/sec

   b. **Volume Flow Conversion Factor** = 1 ÷ 8 = 0.1250

4. Set **Volume Flow Conversion Factor** to 0.1250.
5. Set **Volume Flow Label** to pints/sec.
6. Set **Volume Total Label** to pints.

4.2.3 Configure Volume Flow Cutoff

Display	Not available
ProLink III	**Device Tools** > **Configuration** > **Process Measurement** > **Flow**
Field Communicator	**Configure** > **Manual Setup** > **Measurements** > **Flow** > **Volume Flow Cutoff**

Overview

Volume Flow Cutoff specifies the lowest volume flow rate that will be reported as measured. All volume flow rates below this cutoff are reported as 0.

Procedure

Set **Volume Flow Cutoff** to the value you want to use.

The default value for **Volume Flow Cutoff** is 0.0 l/sec (liters per second). The lower limit is 0.

Interaction between Volume Flow Cutoff and mAO Cutoff

Volume Flow Cutoff defines the lowest liquid volume flow value that the transmitter will report as measured. **mAO Cutoff** defines the lowest flow rate that will be reported via the mA Output. If **mA Output Process Variable** is set to Volume Flow Rate, the volume flow rate reported via the mA Output is controlled by the higher of the two cutoff values.

Volume Flow Cutoff affects both the volume flow values reported via the outputs and the volume flow values used in other transmitter behavior (e.g., events defined on the volume flow).

mAO Cutoff affects only flow values reported via the mA Output.

Example: Cutoff interaction with mAO Cutoff lower than Volume Flow Cutoff

Configuration:

- **mA Output Process Variable**: Volume Flow Rate
- **Frequency Output Process Variable**: Volume Flow Rate
- **AO Cutoff**: 10 l/sec
- **Volume Flow Cutoff**: 15 l/sec

Result: If the volume flow rate drops below 15 l/sec, volume flow will be reported as 0, and 0 will be used in all internal processing.

Example: Cutoff interaction with mAO Cutoff higher than Volume Flow Cutoff

Configuration:

- **mA Output Process Variable**: Volume Flow Rate
- **Frequency Output Process Variable**: Volume Flow Rate
- **AO Cutoff**: 15 l/sec
- **Volume Flow Cutoff**: 10 l/sec

Result:

- If the volume flow rate drops below 15 l/sec but not below 10 l/sec:
  - The mA Output will report zero flow.
  - The Frequency Output will report the actual flow rate, and the actual flow rate will be used in all internal processing.
- If the volume flow rate drops below 10 l/sec, both outputs will report zero flow, and 0 will be used in all internal processing.

4.3 Configure GSV flow measurement

The gas standard volume (GSV) flow measurement parameters control how volume flow is measured and reported in a gas application.

Restriction

You cannot implement both liquid volume flow and gas standard volume flow at the same time. Choose one or the other.

4.3.1 Configure Volume Flow Type for gas applications

Display	Not available
ProLink III	**Device Tools** > **Configuration** > **Process Measurement** > **Flow**
Field Communicator	**Configure** > **Manual Setup** > **Measurements** > **GSV** > **Volume Flow Type** > **Standard Gas Volume**

Overview

Volume Flow Type controls whether liquid or gas standard volume flow measurement is used.

Restriction

Gas standard volume measurement is incompatible with some applications. Set **Volume Flow Type** to Liquid if you are using any of the following applications:

- Petroleum measurement
- Concentration measurement
- Fuel consumption
- Production Volume Reconciliation (PVR)

Procedure

Set **Volume Flow Type** to Gas Standard Volume.

4.3.2 Configure Standard Density of Gas

Display	Not available
ProLink III	**Device Tools** > **Configuration** > **Process Measurement** > **Flow**
Field Communicator	**Configure** > **Manual Setup** > **Measurements** > **GSV** > **Gas Ref Density**

Overview

The **Standard Density of Gas** value is the gas density at standard reference conditions. Use it to convert the measured mass flow data to volume flow at reference conditions.

Prerequisites

Ensure that **Density Measurement Unit** is set to the measurement unit you want to use for **Standard Density of Gas**.

Procedure

From the **Source** field, choose the method to supply gas base density data and perform the required setup.

Option	Description
Fixed Value or Digital Communications	A host writes gas base density data to the meter at appropriate intervals. Continue to *Configure fixed value or digital communications*.
Poll for external value	The meter polls an external HART device for gas base density data in order to then compute gas standard volume from the mass flow and gas base density. Continue to *Poll for external value*.

Configure fixed value or digital communications

Prerequisites

Section 4.3.2

Procedure

1. Set **Standard Density of Gas** to the standard reference density of the gas you are measuring.

   Note
   ProLink III provides a guided method that you can use to calculate your gas base density, if you do not know it.

2. Continue to *Section 4.3.3*.

Poll for external value

Prerequisites

Section 4.3.2

Procedure

1. Set **Polling Slot** to an available slot.

2. Set **Polling Control *n*** as one of the following options:

   The *n* is the value you selected in the **Polling Slot** field.

   If there is another master, and if that master is primary, then set this field to secondary. If the other master is secondary, then set this field to primary.

Option	Description
Poll as Primary	No other HART masters will be on the network.
Poll as Secondary	Other HART masters will be on the network.

3. Set **External Device Tag *n*** to the HART tag of the device being polled.

   The *n* is the value you selected in the **Polling Slot** field.

   - The device being polled (slave) cannot have special units set for density. Otherwise, the master will reject the base density and report the following alarm:

     ```
     A115: No External Input or Polled Data Alert
     ```

   - On the slave side, setup the HART Primary Variable for Base Density. The master will reject anything other than Base Density for the HART Primary Variable and trigger an A115 alarm.
   - The density units on the transmitter and the polled device can be different as long as they can be classified as density units; for example, kg/m^3 and g/cm^3. The transmitter converts the polled units into compatible specified units.

   For wiring and setup instructions for a polled device, refer to the *Micro Motion Gas Density Meters (GDM) Installation manual* or the *Micro Motion Specific Gravity Meters (SGM) Installation manual*.

4. Continue to *Section 4.3.3*.

4.3.3 Configure Gas Standard Volume Flow Unit

Display	**OFF-LINE MAINT** > **OFF-LINE CONFG** > **UNITS** > **GSV**
ProLink III	**Device Tools** > **Configuration** > **Process Measurement** > **Flow**
Field Communicator	**Configure** > **Manual Setup** > **Measurements** > **GSV** > **GSV Flow Unit**

Overview

Gas Standard Volume Flow Unit specifies the unit of measure that will be displayed for the gas standard volume flow. The measurement unit used for the gas volume total and the gas volume inventory is derived from this unit.

Prerequisites

Before you configure **Gas Standard Volume Flow Unit**, be sure that **Volume Flow Type** is set to Gas Standard Volume.

For polling, the first transmitter (master) requests density from a second transmitter (slave) via HART communications. Special units for GSV are allowed on the master side, but the device being polled (slave) cannot have special units set for density, otherwise the master will reject the base density and report an A115: No External Input or Polled Data Alert.

Procedure

Set **Gas Standard Volume Flow Unit** to the unit you want to use.

The default setting for **Gas Standard Volume Flow Unit** is SCFM (Standard Cubic Feet per Minute).

Tip

If the measurement unit you want to use is not available, you can define a special measurement unit.

Options for Gas Standard Volume Flow Unit

The transmitter provides a standard set of measurement units for **Gas Standard Volume Flow Unit**, plus one user-defined special measurement unit. Different communications tools may use different labels for the units.

	Label		
Unit description	**Display**	**ProLink III**	**Field Communicator**
Normal cubic meters per second	NM3/S	Nm3/sec	Nm3/sec
Normal cubic meters per minute	NM3/MN	Nm3/sec	Nm3/min
Normal cubic meters per hour	NM3/H	Nm3/hr	Nm3/hr
Normal cubic meters per day	NM3/D	Nm3/day	Nm3/day
Normal liters per second	NLPS	NLPS	NLPS
Normal liters per minute	NLPM	NLPM	NLPM
Normal liters per hour	NLPH	NLPH	NLPH
Normal liters per day	NLPD	NLPD	NLPD
Standard cubic feet per second	SCFS	SCFS	SCFS
Standard cubic feet per minute	SCFM	SCFM	SCFM
Standard cubic feet per hour	SCFH	SCFH	SCFH
Standard cubic feet per day	SCFD	SCFD	SCFD
Standard cubic meters per second	SM3/S	Sm3/sec	Sm3/sec
Standard cubic meters per minute	SM3/MN	Sm3/min	Sm3/min
Standard cubic meters per hour	SM3/H	Sm3/hr	Sm3/hr
Standard cubic meters per day	SM3/D	Sm3/day	Sm3/day
Standard liters per second	SLPS	SLPS	SLPS
Standard liters per minute	SLPM	SLPM	SLPM
Standard liters per hour	SLPH	SLPH	SLPH

Unit description	Label		
	Display	ProLink III	Field Communicator
Standard liters per day	SLPD	SLPD	SLPD
Special measurement unit	SPECL	special	Special

Define a special measurement unit for gas standard volume flow

Display	Not available
ProLink III	**Device Tools** > **Configuration** > **Process Measurement** > **Flow** > **Special Units**
Field Communicator	**Configure** > **Manual Setup** > **Measurements** > **Special Units** > **Special GSV Units**

Overview

A special measurement unit is a user-defined unit of measure that allows you to report process data, totalizer data, and inventory data in a unit that is not available in the transmitter. A special measurement unit is calculated from an existing measurement unit using a conversion factor.

Note

Although you cannot define a special measurement unit using the display, you can use the display to select an existing special measurement unit, and to view process data using the special measurement unit.

Procedure

1. Specify **Base Gas Standard Volume Unit**.

   Base Gas Standard Volume Unit is the existing gas standard volume unit that the special unit will be based on.
2. Specify **Base Time Unit**.

   Base Time Unit is the existing time unit that the special unit will be based on.
3. Calculate **Gas Standard Volume Flow Conversion Factor** as follows:

   a. x base units = y special units

   b. **Gas Standard Volume Flow Conversion Factor** = x ÷ y
4. Enter the **Gas Standard Volume Flow Conversion Factor**.

   The original gas standard volume flow value is divided by this conversion factor.
5. Set **Gas Standard Volume Flow Label** to the name you want to use for the gas standard volume flow unit.
6. Set **Gas Standard Volume Total Label** to the name you want to use for the gas standard volume total and gas standard volume inventory unit.

The special measurement unit is stored in the transmitter. You can configure the transmitter to use the special measurement unit at any time.

Example: Defining a special measurement unit for gas standard volume flow

You want to measure gas standard volume flow in thousands of standard cubic feet per minute.

1. Set **Base Gas Standard Volume Unit** to SCF.
2. Set **Base Time Unit** to minutes (min).
3. Calculate the conversion factor:
   a. 1 thousands of standard cubic feet per minute = 1000 cubic feet per minute
   b. **Gas Standard Volume Flow Conversion Factor** = 1 ÷ 1000 = 0.001 standard
4. Set **Gas Standard Volume Flow Conversion Factor** to 0.001.
5. Set **Gas Standard Volume Flow Label** to MSCFM.
6. Set **Gas Standard Volume Total Label** to MSCF.

4.3.4 Configure Gas Standard Volume Flow Cutoff

Display	Not available
ProLink III	**Device Tools** > **Configuration** > **Process Measurement** > **Flow**
Field Communicator	**Configure** > **Manual Setup** > **Measurements** > **GSV** > **GSV Cutoff**

Overview

Gas Standard Volume Flow Cutoff specifies the lowest gas standard volume flow rate that will reported as measured. All gas standard volume flow rates below this cutoff will be reported as 0.

Procedure

Set **Gas Standard Volume Flow Cutoff** to the value you want to use.

The default value for **Gas Standard Volume Flow Cutoff** is 0.0. The lower limit is 0.0. There is no upper limit.

Interaction between Gas Standard Volume Flow Cutoff and mA Output Cutoff

Gas Standard Volume Flow Cutoff defines the lowest Gas Standard Volume flow value that the transmitter will report as measured. **mA Output Cutoff** defines the lowest flow rate that will be reported via the mA Output. If **mA Output Process Variable** is set to Gas Standard Volume Flow Rate, the volume flow rate reported via the mA Output is controlled by the higher of the two cutoff values.

Gas Standard Volume Flow Cutoff affects both the gas standard volume flow values reported via outputs and the gas standard volume flow values used in other transmitter behavior (e.g., events defined on gas standard volume flow).

mA Output Cutoff affects only flow values reported via the mA Output.

Example: Cutoff interaction with mA Output Cutoff lower than Gas Standard Volume Flow Cutoff

Configuration:

- **mA Output Process Variable** for the primary mA Output: Gas Standard Volume Flow Rate
- **Frequency Output Process Variable**: Gas Standard Volume Flow Rate
- **mA Output Cutoff** for the primary mA Output: 10 SLPM (standard liters per minute)
- **Gas Standard Volume Flow Cutoff**: 15 SLPM

Result: If the gas standard volume flow rate drops below 15 SLPM, the volume flow will be reported as 0, and 0 will be used in all internal processing.

Example: Cutoff interaction with mA Output Cutoff higher than Gas Standard Volume Flow Cutoff

Configuration:

- **mA Output Process Variable** for the primary mA Output: Gas Standard Volume Flow Rate
- **Frequency Output Process Variable**: Gas Standard Volume Flow Rate
- **mA Output Cutoff** for the primary mA Output: 15 SLPM (standard liters per minute)
- **Gas Standard Volume Flow Cutoff**: 10 SLPM

Result:

- If the gas standard volume flow rate drops below 15 SLPM but not below 10 SLPM:
  - The primary mA Output will report zero flow.
  - The Frequency Output will report the actual flow rate, and the actual flow rate will be used in all internal processing.
- If the gas standard volume flow rate drops below 10 SLPM, both outputs will report zero flow, and 0 will be used in all internal processing.

4.4 Configure Flow Direction

Display	Not available
ProLink III	**Device Tools** > **Configuration** > **Process Measurement** > **Flow**
Field Communicator	**Configure** > **Manual Setup** > **Measurements** > **Flow** > **Flow Direction**

Overview

Flow Direction controls how forward flow and reverse flow affect flow measurement and reporting.

Flow Direction is defined with respect to the flow arrow on the sensor:

- Forward flow (positive flow) moves in the direction of the flow arrow on the sensor.
- Reverse flow (negative flow) moves in the direction opposite to the flow arrow on the sensor.

Tip

Micro Motion sensors are bidirectional. Measurement accuracy is not affected by actual flow direction or the setting of the **Flow Direction** parameter.

Procedure

Set **Flow Direction** to the value you want to use.

The default setting is Forward.

4.4.1 Options for Flow Direction

Flow Direction setting		Relationship to Flow Direction arrow on sensor
ProLink III	**Field Communicator**	
Forward	Forward	Appropriate when the Flow Direction arrow is in the same direction as the majority of flow.
Reverse	Reverse	Appropriate when the Flow Direction arrow is in the opposite direction from the majority of flow.
Absolute Value	Absolute Value	Flow Direction arrow is not relevant.
Bidirectional	Bi directional	Appropriate when both forward and reverse flow are expected, and forward flow will dominate, but the amount of reverse flow will be significant.
Negate Forward	Negate/Forward Only	Appropriate when the Flow Direction arrow is in the opposite direction from the majority of flow.
Negate Bidirectional	Negate/Bi-directional	Appropriate when both forward and reverse flow are expected, and reverse flow will dominate, but the amount of forward flow will be significant.

Effect of Flow Direction on mA Outputs

Flow Direction affects how the transmitter reports flow values via the mA Outputs. The mA Outputs are affected by **Flow Direction** only if **mA Output Process Variable** is set to a flow variable.

Flow Direction and mA Outputs

The effect of Flow Direction on the mA Outputs depends on Lower Range Value configured for the mA Output:

- If **Lower Range Value** is set to 0, see *Figure 4-1*.
- If **Lower Range Value** is set to a negative value, see *Figure 4-2*.

Figure 4-1: Effect of Flow Direction on the mA Output: Lower Range Value = 0

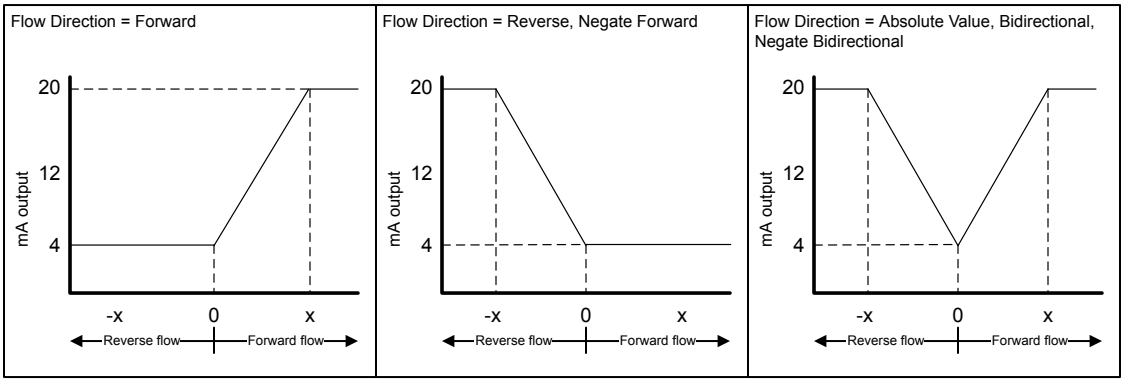

- *Lower Range Value = 0*
- *Upper Range Value = x*

Figure 4-2: Effect of Flow Direction on the mA Output: Lower Range Value < 0

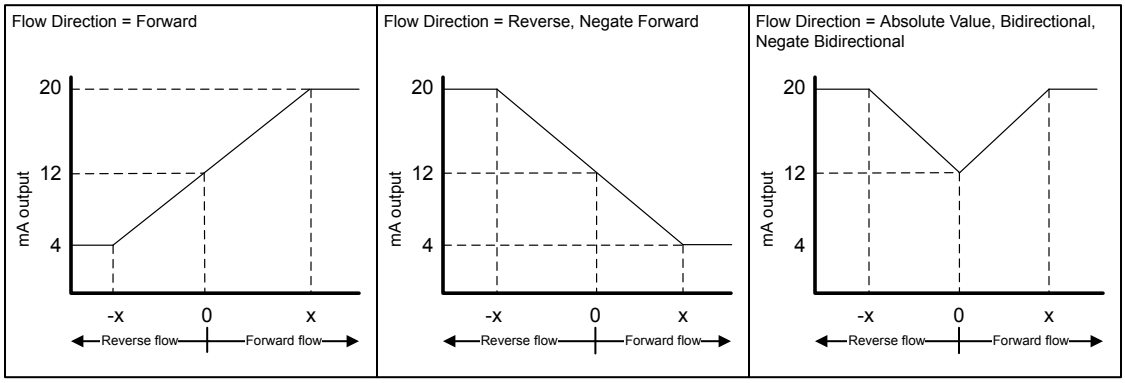

- *Lower Range Value* = −*x*
- *Upper Range Value* = *x*

Example: Flow Direction = Forward and Lower Range Value = 0

Configuration:

- **Flow Direction** = Forward
- **Lower Range Value** = 0 g/sec
- **Upper Range Value** = 100 g/sec

Result:

- Under conditions of zero flow, the mA Output is 4 mA.
- Under conditions of forward flow, up to a flow rate of 100 g/sec, the mA Output varies between 4 mA and 20 mA in proportion to the flow rate.
- Under conditions of forward flow, if the flow rate equals or exceeds 100 g/sec, the mA Output will be proportional to the flow rate up to 20.5 mA, and will be level at 20.5 mA at higher flow rates.

Example: Flow Direction = Forward and Lower Range Value < 0

Configuration:

- **Flow Direction** = Forward
- **Lower Range Value** = −100 g/sec
- **Upper Range Value** = +100 g/sec

Result:

- Under conditions of zero flow, the mA Output is 12 mA.

- Under conditions of forward flow, for flow rates between 0 and +100 g/sec, the mA Output varies between 12 mA and 20 mA in proportion to (the absolute value of) the flow rate.
- Under conditions of forward flow, if (the absolute value of) the flow rate equals or exceeds 100 g/sec, the mA Output is proportional to the flow rate up to 20.5 mA, and will be level at 20.5 mA at higher flow rates.
- Under conditions of reverse flow, for flow rates between 0 and −100 g/sec, the mA Output varies between 4 mA and 12 mA in inverse proportion to the absolute value of the flow rate.
- Under conditions of reverse flow, if the absolute value of the flow rate equals or exceeds 100 g/sec, the mA Output is inversely proportional to the flow rate down to 3.8 mA, and will be level at 3.8 mA at higher absolute values.

Example: Flow Direction = Reverse

Configuration:

- **Flow Direction** = Reverse
- **Lower Range Value** = 0 g/sec
- **Upper Range Value** = 100 g/sec

Result:

- Under conditions of zero flow, the mA Output is 4 mA.
- Under conditions of reverse flow, for flow rates between 0 and +100 g/sec, the mA Output level varies between 4 mA and 20 mA in proportion to the absolute value of the flow rate.
- Under conditions of reverse flow, if the absolute value of the flow rate equals or exceeds 100 g/sec, the mA Output will be proportional to the absolute value of the flow rate up to 20.5 mA, and will be level at 20.5 mA at higher absolute values.

Effect of flow direction on Frequency Outputs

Flow direction affects how the transmitter reports flow values via the Frequency Outputs. The Frequency Outputs are affected by flow direction only if **Frequency Output Process Variable** is set to a flow variable.

Table 4-1: Effect of the flow direction parameter and actual flow direction on Frequency Outputs

	Actual flow direction		
Flow Direction setting	**Forward**	**Zero flow**	**Reverse**
Forward	Hz > 0	0 Hz	0 Hz
Reverse	0 Hz	0 Hz	Hz > 0
Bidirectional	Hz > 0	0 Hz	Hz > 0
Absolute Value	Hz > 0	0 Hz	Hz > 0
Negate Forward	0 Hz	0 Hz	Hz > 0

Table 4-1: Effect of the flow direction parameter and actual flow direction on Frequency Outputs *(continued)*

Flow Direction setting	Actual flow direction		
	Forward	**Zero flow**	**Reverse**
Negate Bidirectional	Hz > 0	0 Hz	Hz > 0

Effect of flow direction on Discrete Outputs

The flow direction parameter affects the Discrete Output behavior only if **Discrete Output Source** is set to Flow Direction.

Table 4-2: Effect of the flow direction parameter and actual flow direction on Discrete Outputs

Flow Direction setting	Actual flow direction		
	Forward	**Zero flow**	**Reverse**
Forward	OFF	OFF	ON
Reverse	OFF	OFF	ON
Bidirectional	OFF	OFF	ON
Absolute Value	OFF	OFF	ON
Negate Forward	ON	OFF	OFF
Negate Bidirectional	ON	OFF	OFF

Effect of flow direction on digital communications

Flow direction affects how flow values are reported via digital communications. The following table describes the effect of the flow direction parameter and actual flow direction on flow values reported via digital communications.

Table 4-3: Effect of the flow direction on flow values

Flow Direction setting	Actual flow direction		
	Forward	**Zero flow**	**Reverse**
Forward	Positive	0	Negative
Reverse	Positive	0	Negative
Bidirectional	Positive	0	Negative
Absolute Value	Positive(1)	0	Positive(1)
Negate Forward	Negative	0	Positive

Table 4-3: Effect of the flow direction on flow values *(continued)*

Flow Direction setting	Actual flow direction		
	Forward	Zero flow	Reverse
Negate Bidirectional	Negative	0	Positive

(1) Refer to the digital communications status bits for an indication of whether flow is positive or negative.

Effect of flow direction on flow totals

Flow direction affects how flow totals and inventories are calculated.

Flow Direction setting	Actual flow direction		
	Forward	Zero flow	Reverse
Forward	Totals increase	Totals do not change	Totals do not change
Reverse	Totals do not change	Totals do not change	Totals increase
Bidirectional	Totals increase	Totals do not change	Totals decrease
Absolute Value	Totals increase	Totals do not change	Totals increase
Negate Forward	Totals do not change	Totals do not change	Totals increase
Negate Bidirectional	Totals decrease	Totals do not change	Totals increase

4.5 Configure density measurement

The density measurement parameters control how density is measured and reported.

4.5.1 Configure Density Measurement Unit

Display	OFF-LINE MAINT > OFF-LINE CONFG > UNITS > DENS
ProLink III	Device Tools > Configuration > Process Measurement > Density
Field Communicator	Configure > Manual Setup > Measurements > Density > Density Unit

Overview

Density Measurement Unit controls the measurement units that will be used in density calculations and reporting.

Procedure

Set **Density Measurement Unit** to the option you want to use.

The default setting for **Density Measurement Unit** is g/cm3 (grams per cubic centimeter).

Options for Density Measurement Unit

The transmitter provides a standard set of measurement units for **Density Measurement Unit**. Different communications tools may use different labels.

Unit description	Label		
	Display	**ProLink III**	**Field Communicator**
Specific gravity(1)	SGU	SGU	SGU
Grams per cubic centimeter	G/CM3	g/cm3	g/Cucm
Grams per liter	G/L	g/l	g/L
Grams per milliliter	G/mL	g/ml	g/mL
Kilograms per liter	KG/L	kg/l	kg/L
Kilograms per cubic meter	KG/M3	kg/m3	kg/Cum
Pounds per U.S. gallon	LB/GAL	lbs/Usgal	lb/gal
Pounds per cubic foot	LB/CUF	lbs/ft3	lb/Cuft
Pounds per cubic inch	LB/CUI	lbs/in3	lb/CuIn
Degrees API	D API	degAPI	degAPI
Short ton per cubic yard	ST/CUY	sT/yd3	STon/Cuyd

(1) Non-standard calculation. This value represents line density divided by the density of water at 60 °F.

4.5.2 Configure two-phase flow parameters

Display	Not available
ProLink III	**Device Tools** > **Configuration** > **Process Measurement** > **Density**
Field Communicator	• **Configure** > **Manual Setup** > **Measurements** > **Density** > **Slug Low Limit** • **Configure** > **Manual Setup** > **Measurements** > **Density** > **Slug High Limit** • **Configure** > **Manual Setup** > **Measurements** > **Density** > **Slug Duration**

Overview

The two-phase flow parameters control how the transmitter detects and reports two-phase flow (gas in a liquid process or liquid in a gas process).

Note

Two-phase flow is also referred to as *slug flow*.

Procedure

1. Set **Two-Phase Flow Low Limit** to the lowest density value that is considered normal in your process.

   Values below this will cause the transmitter to post Alert A105 (Two-Phase Flow).

Tip
Gas entrainment can cause your process density to drop temporarily. To reduce the occurrence of two-phase flow alerts that are not significant to your process, set **Two-Phase Flow Low Limit** slightly below your expected lowest process density.

You must enter **Two-Phase Flow Low Limit** in g/cm³, even if you configured another unit for density measurement.

The default value for **Two-Phase Flow Low Limit** is 0.0 g/cm³. The range is 0.0 to 10.0 g/cm³.

2. Set **Two-Phase Flow High Limit** to the highest density value that is considered normal in your process.

   Micro Motion recommends leaving **Two-Phase Flow High Limit** at the default value.

   Values above this will cause the transmitter to post Alert A105 (Two-Phase Flow).

   You must enter **Two-Phase Flow High Limit** in g/cm³, even if you configured another unit for density measurement.

   The default value for **Two-Phase Flow High Limit** is 5.0 g/cm³. The range is 0.0 to 10.0 g/cm³.

3. Set **Two-Phase Flow Timeout** to the number of seconds that the transmitter will wait for a two-phase flow condition to clear before posting the alert.

   The default value for **Two-Phase Flow Timeout** is 0.0 seconds, meaning that the alert will be posted immediately. The range is 0.0 to 60.0 seconds.

Detecting and reporting two-phase flow

Two-phase flow (gas in a liquid process or liquid in a gas process) can cause a variety of process control issues. By configuring the two-phase flow parameters appropriately for your application, you can detect process conditions that require correction.

Micro Motion recommends leaving **Two-Phase Flow High Limit** at the default value.

A two-phase flow condition occurs whenever the measured density goes below **Two-Phase Flow Low Limit** or above **Two-Phase Flow High Limit**. If this occurs:

- A two-phase flow alert is posted to the active alert log.
- All outputs that are configured to represent flow rate hold their last *pre-alert* value for the number of seconds configured in **Two-Phase Flow Timeout**.

If the two-phase flow condition clears before **Two-Phase Flow Timeout** expires:

- Outputs that represent flow rate revert to reporting actual flow.
- The two-phase flow alert is deactivated, but remains in the active alert log until it is acknowledged.

If the two-phase flow condition does not clear before **Two-Phase Flow Timeout** expires, the outputs that represent flow rate report a flow rate of 0.

If **Two-Phase Flow Timeout** is set to 0.0 seconds, the outputs that represent flow rate will report a flow rate of 0 as soon as two-phase flow is detected.

4.5.3 Configure Density Damping

Display	Not available
ProLink III	**Device Tools** > **Configuration** > **Process Measurement** > **Density**
Field Communicator	**Configure** > **Manual Setup** > **Measurements** > **Density** > **Density Damping**

Overview

Density Damping controls the amount of damping that will be applied to the line density value.

Damping is used to smooth out small, rapid fluctuations in process measurement. **Damping Value** specifies the time period (in seconds) over which the transmitter will spread changes in the process variable. At the end of the interval, the internal value will reflect 63% of the change in the actual measured value.

Tip

Density damping affects all process variables that are calculated from line density.

Procedure

Set **Density Damping** to the value you want to use.

The default value is 1.6 seconds. The range depends on the core processor type and the setting of **Update Rate**, as shown in the following table:

Update Rate setting	Damping range
Normal	0 to 51.2 seconds
Special	0 to 40.96 seconds

Tips

- A high damping value makes the process variable appear smoother because the reported value changes slowly.
- A low damping value makes the process variable appear more erratic because the reported value changes more quickly.
- Whenever the damping value is non-zero, the reported measurement will lag the actual measurement because the reported value is being averaged over time.
- In general, lower damping values are preferable because there is less chance of data loss, and less lag time between the actual measurement and the reported value.

The value you enter is automatically rounded off to the nearest valid value. The valid values for **Density Damping** depend on the setting of **Update Rate**.

Update Rate setting	Valid damping values
Normal	0.0, 0.2, 0.4, 0.8, 1.6, 3.2, 6.4, 12.8, 25.6, 51.2
Special	0.0, 0.04, 0.08, 0.16, 0.32, 0.64, 1.28, 2.56, 5.12, 10.24, 20.48, 40.96

Effect of Density Damping on volume measurement

Density Damping affects liquid volume measurement. Liquid volume values are calculated from the damped density value rather than the measured density value. **Density Damping** does not affect gas standard volume measurement.

Interaction between Density Damping and Added Damping

When the mA Output is configured to report density, both **Density Damping** and **Added Damping** are applied to the reported density value.

Density Damping controls the rate of change in the value of the process variable in transmitter memory. **Added Damping** controls the rate of change reported via the mA Output.

If **mA Output Process Variable** is set to Density, and both **Density Damping** and **Added Damping** are set to non-zero values, density damping is applied first, and the added damping calculation is applied to the result of the first calculation. This value is reported over the mA Output.

4.5.4 Configure Density Cutoff

Display	Not available
ProLink III	**Device Tools** > **Configuration** > **Process Measurement** > **Density**
Field Communicator	**Configure** > **Manual Setup** > **Measurements** > **Density** > **Density Cutoff**

Overview

Density Cutoff specifies the lowest density value that will be reported as measured. All density values below this cutoff will be reported as 0.

Procedure

Set **Density Cutoff** to the value you want to use.

For most applications, the default setting (0.2 g/cm³) is sufficient. The range is 0.0 g/cm³ to 0.5 g/cm³.

Effect of Density Cutoff on volume measurement

Density Cutoff affects liquid volume measurement. If the density value goes below **Density Cutoff**, the volume flow rate is reported as 0. **Density Cutoff** does not affect gas standard volume measurement. Gas standard volume values are always calculated from the value configured for **Standard Gas Density** or polled value if configured for polled base density.

4.6 Configure temperature measurement

The temperature measurement parameters control how temperature data from the sensor is reported.

4.6.1 Configure Temperature Measurement Unit

Display	**OFF-LINE MAINT** > **OFF-LINE CONFG** > **UNITS** > **TEMP**
ProLink III	**Device Tools** > **Configuration** > **Process Measurement** > **Temperature**
Field Communicator	**Configure** > **Manual Setup** > **Measurements** > **Temperature** > **Temperature Unit**

Overview

Temperature Measurement Unit specifies the unit that will be used for temperature measurement.

Procedure

Set **Temperature Measurement Unit** to the option you want to use.

The default setting is Degrees Celsius.

Options for Temperature Measurement Unit

The transmitter provides a standard set of units for **Temperature Measurement Unit**. Different communications tools may use different labels for the units.

Unit description	Label		
	Display	**ProLink III**	**Field Communicator**
Degrees Celsius	°C	°C	degC
Degrees Fahrenheit	°F	°F	degF
Degrees Rankine	°R	°R	degR
Kelvin	°K	°K	Kelvin

4.6.2 Configure Temperature Damping

Display	Not available
ProLink III	**Device Tools** > **Configuration** > **Temperature**
Field Communicator	**Configure** > **Manual Setup** > **Measurements** > **Temperature** > **Temp Damping**

Overview

Temperature Damping controls the amount of damping that will be applied to the line temperature value, when the on-board temperature data is used (RTD).

Damping is used to smooth out small, rapid fluctuations in process measurement. **Damping Value** specifies the time period (in seconds) over which the transmitter will spread changes in the process variable. At the end of the interval, the internal value will reflect 63% of the change in the actual measured value.

Tip

Temperature Damping affects all process variables, compensations, and corrections that use temperature data from the sensor.

Procedure

Enter the value you want to use for **Temperature Damping**.

The default value is 4.8 seconds. The range is 0.0 to 38.4 seconds.

Tips

- A high damping value makes the process variable appear smoother because the reported value changes slowly.
- A low damping value makes the process variable appear more erratic because the reported value changes more quickly.
- Whenever the damping value is non-zero, the reported measurement will lag the actual measurement because the reported value is being averaged over time.
- In general, lower damping values are preferable because there is less chance of data loss, and less lag time between the actual measurement and the reported value.

The value you enter is automatically rounded off to the nearest valid value. Valid values for **Temperature Damping** are 0, 0.6, 1.2, 2.4, 4.8, ... 38.4.

4.6.3 Effect of Temperature Damping on process measurement

Temperature Damping affects all processes and algorithms that use temperature data from the internal sensor RTD.

Temperature compensation

Temperature compensation adjusts process measurement to compensate for the effect of temperature on the sensor tubes.

Petroleum measurement

Temperature Damping affects petroleum measurement process variables only if the transmitter is configured to use temperature data from the sensor. If an external temperature value is used for petroleum measurement, **Temperature Damping** does not affect petroleum measurement process variables.

Concentration measurement

Temperature Damping affects concentration measurement process variables only if the transmitter is configured to use temperature data from the sensor. If an external temperature value is used for concentration measurement, **Temperature Damping** does not affect concentration measurement process variables.

4.7 Configure the petroleum measurement application

The petroleum measurement application corrects line density to reference temperature according to American Petroleum Institute (API) standards. The resulting process variable is *referred density*.

Restriction

The petroleum measurement application is not compatible with the following applications:

- Gas standard volume measurement (GSV)
- Concentration measurement
- Production Volume Reconciliation (PVR)
- Transient Mist Remediation (TMR)
- Fuel consumption

4.7.1 Configure petroleum measurement using ProLink III

The petroleum measurement parameters specify the API table, measurement units, and reference values to be used in referred density calculations.

Prerequisites

You will need API documentation for the API table that you select.

Depending on your API table, you may need to know the thermal expansion coefficient (TEC) for your process fluid.

You must know the reference temperature that you want to use.

Procedure

1. Choose **Device Tools** > **Configuration** > **Process Measurement** > **Petroleum Measurement**.
2. Specify the API table to use to calculate referred density.

   Each API table is associated with a specific set of equations.

   a. Set **Process Fluid** to the API table group that your process fluid belongs to.

API table group	Process fluids
A tables	Generalized crude and JP4
B tables	Generalized products: Gasoline, jet fuel, aviation fuel, kerosene, heating oils, fuel oils, diesel, gas oil
C tables	Liquids with a constant base density or known thermal expansion coefficient (TEC). You will be required to enter the TEC for your process fluid.
D tables	Lubricating oils

   b. Set **Referred Density Measurement Unit** to the measurement units that you want to use for referred density.

   c. Click **Apply**.

   These parameters uniquely identify the API table to be used to calculate referred density. The selected API table is displayed, and the meter automatically changes the density unit, temperature unit, pressure unit, and reference pressure to match the API table.

   Your choice also determines the API table that will be used to calculate the correction factor for volume (CTL).

   Restriction

   Not all combinations are supported by the petroleum measurement application. See the list of API tables in this manual.

3. Refer to the API documentation and confirm your table selection.

   a. Verify that your process fluid falls within range for line density, line temperature, and line pressure.

   b. Verify that the referred density range of the selected table is adequate for your application.

4. If you chose a C table, enter **Thermal Expansion Coefficient (TEC)** for your process fluid.
5. Set **Reference Temperature** to the temperature to which density will be corrected in referred density calculations. If you choose Other, select the temperature measurement unit and enter the reference temperature.

4.7.2 Set up temperature data for petroleum measurement using ProLink III

The petroleum measurement application uses temperature data in its calculations. You must decide how to provide this data, then perform the required configuration and setup.

Tip

Fixed values for temperature are not recommended. Using a fixed temperature value may produce inaccurate process data.

Prerequisites

If you plan to poll an external device, the primary mA output (Channel A) must be wired to support HART communications.

If you are using an external temperature device, it must use the temperature unit that is configured in the transmitter.

Procedure

1. Choose **Device Tools** > **Configuration** > **Process Measurement** > **Petroleum Measurement**.
2. Choose the method to be used to supply temperature data, and perform the required setup.

<table>
<tr><th>Option</th><th>Description</th><th>Setup</th></tr>
<tr><td>Internal RTD temperature data</td><td>Temperature data from the on-board temperature sensor (RTD) is used.</td><td>a. Set Line Temperature Source to Internal RTD.
b. Click Apply.</td></tr>
<tr><td>Polling</td><td>The meter polls an external device for temperature data. This data will be available in addition to the internal RTD temperature data.</td><td>a. Set Line Temperature Source to Poll for External Value.
b. Set Polling Slot to an available slot.
c. Set Polling Control to Poll as Primary or Poll as Secondary.
<table>
<tr><th>Option</th><th>Description</th></tr>
<tr><td>Poll as Primary</td><td>No other HART masters will be on the network. The Field Communicator is not a HART master.</td></tr>
<tr><td>Poll as Secondary</td><td>Other HART masters will be on the network. The Field Communicator is not a HART master.</td></tr>
</table>
d. Set External Device Tag to the HART tag of the temperature device.
e. Click Apply.</td></tr>
</table>

Option	Description	Setup
Digital communications	A host writes temperature data to the meter at appropriate intervals. This data will be available in addition to the internal RTD temperature data.	a. Set **Line Temperature Source** to Fixed Value or Digital Communications. b. Click **Apply**. c. Perform the necessary host programming and communications setup to write temperature data to the meter at appropriate intervals.

Postrequisites

If you are using external temperature data, verify the external temperature value displayed in the Inputs group on the ProLink III main window.

Need help? If the value is not correct:

- Ensure that the external device and the meter are using the same measurement unit.
- For polling:
  - Verify the wiring between the meter and the external device.
  - Verify the HART tag of the external device.
- For digital communications:
  - Verify that the host has access to the required data.
  - Verify that the host is writing to the correct register in memory, using the correct data type.

4.7.3 Configure petroleum measurement using the Field Communicator

1. Choose **Online** > **Configure** > **Manual Setup** > **Measurements** > **Set Up Petroleum**.
2. Specify the API table to use.

   a. Open the Petroleum Measurement Source menu and select the API table number.

   Depending on your choice, you may be prompted to enter a reference temperature or a thermal expansion coefficient.

   b. Enter the API table letter.

   These two parameters uniquely specify the API table.

3. Determine how the transmitter will obtain temperature data for the petroleum measurement calculations, and perform the required setup.

Option	Setup
Temperature data from the sensor	a. Choose **Online** > **Configure** > **Manual Setup** > **Measurements** > **External Pressure/Temperature** > **Temperature** . b. Set **External Temperature** to Disabled.

Option	Setup
A user-configured static temperature value	a. Choose **Online** > **Configure** > **Manual Setup** > **Measurements** > **External Pressure/Temperature** > **Temperature** . b. Set **External Temperature** to Enabled. c. Set **Correction Temperature** to the value to be used.
Polling for temperature	a. Ensure that the primary mA output has been wired to support HART polling. b. Choose **Online** > **Configure** > **Manual Setup** > **Measurements** > **External Pressure/Temperature** > **Temperature** . c. Set **External Temperature** to Enabled. d. Choose **External Polling**. e. Set **Poll Control** to Poll As Primary or Poll as Secondary. f. Determine whether you will use Polling Slot 1 or Polling Slot 2. g. For the chosen slot, set **Ext Dev Tag** to the HART tag of the external temperature device. h. For the chosen slot, set **Polled Variable** to Temperature. **Tip** • Poll as Primary: No other HART masters will be on the network. • Poll as Secondary: Other HART masters will be on the network. The Field Communicator is not a HART master.
A value written by digital communications	a. Choose **Online** > **Configure** > **Manual Setup** > **Measurements** > **External Pressure/Temperature** > **Temperature** . b. Set **External Temperature** to Enabled. c. Perform the necessary host programming and communications setup to write temperature data to the transmitter at appropriate intervals. **Note** If the Weights & Measures application is implemented and the transmitter is secured, digital communications cannot be used to write temperature or pressure data to the transmitter.

4.7.4 API tables supported by the petroleum measurement application

The API tables listed here are supported by the petroleum measurement application.

Table name	Process fluid	CTL source data	Reference temperature	Density unit
5A	Generalized crude and JP4	Observed density and observed temperature	60 °F (non-configurable)	Degrees API Range: 0 to 100

Table name	Process fluid	CTL source data	Reference temperature	Density unit
5B	Generalized products	Observed density and observed temperature	60 °F (non-configurable)	Degrees API Range: 0 to 85
5D	Lubricating oils	Observed density and observed temperature	60 °F (non-configurable)	Degrees API Range: −10 to +45
6C	Liquids with a constant density base or known thermal expansion coefficient	User-supplied reference density (or thermal expansion coefficient) and observed temperature	60 °F (non-configurable)	Degrees API
23A	Generalized crude and JP4	Observed density and observed temperature	60 °F (non-configurable)	Relative density Range: 0.6110 to 1.0760
23B	Generalized products	Observed density and observed temperature	60 °F (non-configurable)	Relative density Range: 0.6535 to 1.0760
23D	Lubricating oils	Observed density and observed temperature	60 °F (non-configurable)	Relative density Range: 0.8520 to 1.1640
24C	Liquids with a constant density base or known thermal expansion coefficient	User-supplied reference density (or thermal expansion coefficient) and observed temperature	60 °F (non-configurable)	Relative density
53A	Generalized crude and JP4	Observed density and observed temperature	15 °C (configurable)	Base density Range: 610 to 1075 kg/m^3
53B	Generalized products	Observed density and observed temperature	15 °C (configurable)	Base density Range: 653 to 1075 kg/m^3
53D	Lubricating oils	Observed density and observed temperature	15 °C (configurable)	Base density Range: 825 to 1164 kg/m^3
54C	Liquids with a constant density base or known thermal expansion coefficient	User-supplied reference density (or thermal expansion coefficient) and observed temperature	15 °C (configurable)	Base density in kg/m^3

Restriction

These tables are not appropriate for the following process fluids: propane and propane mixes, butane and butane mixes, butadiene and butadiene mixes, isopentane, LNG, LPG, NGL, ethylene, propylene, cyclohexane, aeromatics, asphalts, and road tars.

4.8 Set up concentration measurement

This section guides you through loading and setting up a concentration matrix used for measurement. It does not cover building a concentration matrix.

The concentration measurement application calculates concentration data from process temperature and density. Micro Motion provides a set of concentration matrices that provide the reference data for several standard industry applications and process fluids. If desired, you can build a custom matrix for your process fluid, or purchase a custom matrix from Micro Motion .

Note

Concentration matrices can be made available on your transmitter either by loading an existing matrix from a file or by building a new matrix. Up to six matrices can be available on your transmitter, but only one can be used for measurement at any given time. See *Micro Motion Enhanced Density Application: Theory, Configuration, and Use* for detailed information on building a matrix.

Prerequisites

Before you can configure concentration measurement:

- The concentration measurement application must be purchased on your transmitter.
- The concentration matrix you want to use must be available on your transmitter, or it must be available as a file on your computer.
- You must know the derived variable that your matrix is designed for.
- You must know the density unit used by your matrix.
- You must know the temperature unit used by your matrix.
- The concentration measurement application must be unlocked.

4.8.1 Configure concentration measurement using ProLink III

1. Choose **Device Tools** > **Configuration** > **Process Measurement** > **Density** and set **Density Unit** to the density unit used by your matrix.
2. Choose **Device Tools** > **Configuration** > **Process Measurement** > **Temperature** and set **Temperature Unit** to the temperature unit used by your matrix.
3. Choose **Device Tools** > **Configuration** > **Process Measurement** > **Concentration Measurement**.
4. Set **Derived Variable** to the derived variable that your matrix is designed for, and click **Apply**.

Important

- All concentration matrices on your transmitter must use the same derived variable. If you are using one of the standard matrices from Micro Motion, set **Derived Variable** to Mass Concentration (Density). If you are using a custom matrix, see the reference information for your matrix.

- If you change the setting of **Derived Variable**, all existing concentration matrices will be deleted from transmitter memory. Set **Derived Variable** before loading concentration matrices.

5. Load one or more matrices.
   a. Set **Matrix Being Configured** to the location to which the matrix will be loaded.
   b. Click **Load Matrix from a File**, navigate to the matrix file on your computer, and load it.
   c. Repeat until all required matrices are loaded.
6. Configure or review matrix data.
   a. If necessary, set **Matrix Being Configured** to the matrix you want to configure or review, and click **Change Matrix**.
   b. Set **Concentration Unit** to the label that will be used for the concentration unit.
   c. If you set **Concentration Unit** to Special, enter the custom label.
   d. If desired, change the matrix name.
   e. Review the data points for this matrix.
   f. Do not change **Reference Temperature** or **Curve Fit Maximum Order**.
   g. If you changed any matrix data, click **Apply**.
7. Set up extrapolation alarms.

   Each concentration matrix is built for a specific density range and a specific temperature range. If process density or process temperature goes outside the range, the transmitter will extrapolate concentration values. However, extrapolation may affect accuracy. Extrapolation alarms are used to notify the operator that extrapolation is occurring.
   a. If necessary, set **Matrix Being Configured** to the matrix you want to view, and select **Change Matrix**.
   b. Set **Extrapolation Alarm Limit** to the point, in percent, at which an extrapolation alarm will be posted.
   c. Enable or disable the high and low limit alarms for temperature and density, as desired, and select **Apply**.

   Restriction
   The high and low limit alarms require the enhanced core processor.

   Example: If **Extrapolation Alarm Limit** is set to 5%, **High Extrapolation Limit (Temperature)** is enabled, and the matrix is built for a temperature range of 40 °F to 80 °F, an extrapolation alarm will be posted if process temperature goes above 82 °F

8. Set **Temperature Source** to the method that the transmitter will use to obtain temperature data.

Option	Description
Poll for external value (1)	The transmitter will poll an external temperature device, using HART protocol over the primary mA output.
RTD	The transmitter will use the temperature data from the sensor.
Static or Digital Communications	The transmitter will use the temperature value that it reads from memory. • Static: The configured value is used. (Not recommended.) • Digital Communications: A host writes transmitter data to transmitter memory. **Note** If the Weights & Measures application is implemented and the transmitter is secured, digital communications cannot be used to write temperature or pressure data to the transmitter.

(1) Not available on all transmitters.

9. If you chose RTD, no more configuration is required. Select **Apply** and exit.
10. If you chose to poll for temperature data:
    a. Select the **Polling Slot** to use.
    b. Set **Polling Control** to Poll as Primary or Poll as Secondary, and click **Apply**.

    Tip
    - Poll as Primary: No other HART masters will be on the network.
    - Poll as Secondary: Other HART masters will be on the network. The Field Communicator is not a HART master.

    c. Set **External Device Tag** to the HART tag of the external temperature device, and select **Apply**.
11. If you chose to use a static temperature value, set **External Temperature** to the value to use, and select **Apply**.
12. If you want to use digital communications, select **Apply**, then perform the necessary host programming and communications setup to write temperature data to the transmitter at appropriate intervals.
13. Set **Active Matrix** to the matrix to be used for measurement.

Concentration process variables are now available on the transmitter. You can view and report them in the same way that you view and report other process variables.

4.8.2 Configure concentration measurement using the Field Communicator

1. Choose **Online** > **Configure** > **Manual Setup** > **Measurements** > **Density** and set **Density Unit** to match the density unit used by your matrix.
2. Choose **Online** > **Configure** > **Manual Setup** > **Measurements** > **Temperature** and set **Temperature Unit** to match the temperature unit used by your matrix.
3. Choose **Online** > **Configure** > **Manual Setup** > **Measurements** and click **Concentration Measurement**.
4. Enable or disable matrix switching, as desired.
5. Set up extrapolation alerts.

   Each concentration matrix is built for a specific density range and a specific temperature range. If process density or process temperature goes outside the range, the transmitter will extrapolate concentration values. However, extrapolation may affect accuracy. Extrapolation alerts are used to notify the operator that extrapolation is occurring.

   a. Click **Next**.
   b. On the Matrix Configuration page, set **Matrix Being Configured** to the matrix that you want to configure.
   c. Modify the matrix name if desired.
   d. Set **Extrapolation Alert Limit** to the point, in percent, at which an extrapolation alert will be posted.
   e. Choose **Online** > **Configure** > **Alert Setup** > **CM Alerts**.
   f. Enable or disable the high and low limit alarms for temperature and density, as desired.

   Restriction
   The high and low limit alarms require the enhanced core processor.

   Example: If **Alarm Limit** is set to 5%, the high-temperature extrapolation alert is enabled, and the matrix is built for a temperature range of 40 °F to 80 °F, an extrapolation alarm will be posted if process temperature goes above 82 °F

6. Select the label that will be used for the concentration unit.

   a. Click **Next**.
   b. On the Concentration Measurement page, set **Concentration Units** to the desired label.
   c. Set **Concentration Units** to the desired label.
   d. If you set **Units** to Special, enter the custom label.
   e. Click **Finish**.
7. Determine how the transmitter will obtain temperature data for the concentration measurement calculations, and perform the required setup.

Option	Setup
Temperature data from the sensor	a. Choose **Online** > **Configure** > **Manual Setup** > **Measurements** . b. Click **External Inputs**. c. Click **Next**. d. Disable **External Temperature**.
A user-configured static temperature value	a. Choose **Online** > **Configure** > **Manual Setup** > **Measurements** . b. Click **External Inputs**. c. Click **Next**. d. Enable **External Temperature**. e. Set **Correction Temperature** to the value to be used.
Polling for temperature(1)	a. Ensure that the primary mA output has been wired to support HART polling. b. Choose **Online** > **Configure** > **Manual Setup** > **Measurements** . c. Click **External Inputs**. d. Click **Next**. e. Enable **External Temperature**. f. Click **Next**. g. Choose an unused polling slot. h. Set **Poll Control** to Poll As Primary Host or Poll as Secondary Host. i. Set **External Tag** to the HART tag of the external temperature device. j. Set **Polled Variable** to Temperature. **Tip** • Poll as Primary: No other HART masters will be on the network. • Poll as Secondary: Other HART masters will be on the network. The Field Communicator is not a HART master.
A value written by digital communications	a. Choose **Online** > **Configure** > **Manual Setup** > **Measurements** > **External Pressure/Temperature** > **Temperature** . b. Enable **External Temperature**. c. Perform the necessary host programming and communications setup to write temperature data to the transmitter at appropriate intervals. **Note** If the Weights & Measures application is implemented and the transmitter is secured, digital communications cannot be used to write temperature or pressure data to the transmitter.

(1) Not available on all transmitters.

8. Choose **Online** > **Configure** > **Manual Setup** > **Measurements** > **Conc Measurement (CM)** > **CM Configuration** and set **Active Matrix** to the matrix to be used for measurement.

Concentration process variables are now available on the transmitter. You can view and report them in the same way that you view and report other process variables.

4.8.3 Standard matrices for the concentration measurement application

The standard concentration matrices available from Micro Motion are applicable for a variety of process fluids. These matrices are included in the ProLink III installation.

Tip

If the standard matrices are not appropriate for your application, you can build a custom matrix or purchase a custom matrix from Micro Motion.

Matrix name	Description	Density unit	Temperature unit	Derived variable
Deg Balling	Matrix represents percent extract, by mass, in solution, based on °Balling. For example, if a wort is 10 °Balling and the extract in solution is 100% sucrose, the extract is 10% of the total mass.	g/cm^3	°F	Mass Concentration (Density)
Deg Brix	Matrix represents a hydrometer scale for sucrose solutions that indicates the percent by mass of sucrose in solution at a given temperature. For example, 40 kg of sucrose mixed with 60 kg of water results in a 40 °Brix solution.	g/cm^3	°C	Mass Concentration (Density)
Deg Plato	Matrix represents percent extract, by mass, in solution, based on °Plato. For example, if a wort is 10 °Plato and the extract in solution is 100% sucrose, the extract is 10% of the total mass.	g/cm^3	°F	Mass Concentration (Density)
HFCS 42	Matrix represents a hydrometer scale for HFCS 42 (high-fructose corn syrup) solutions that indicates the percent by mass of HFCS in solution.	g/cm^3	°C	Mass Concentration (Density)
HFCS 55	Matrix represents a hydrometer scale for HFCS 55 (high-fructose corn syrup) solutions that indicates the percent by mass of HFCS in solution.	g/cm^3	°C	Mass Concentration (Density)
HFCS 90	Matrix represents a hydrometer scale for HFCS 90 (high-fructose corn syrup) solutions that indicates the percent by mass of HFCS in solution.	g/cm^3	°C	Mass Concentration (Density)

4.8.4 Derived variables and calculated process variables

The concentration measurement application calculates a different set of process variables from each derived variable. The process variables are then available for viewing or reporting.

Derived Variable	Description	Calculated process variables					
		Density at reference tempera-ture	Standard volume flow rate	Specific gravity	Concen-tration	Net mass flow rate	Net volume flow rate
Density at Reference	Mass/unit volume, cor-rected to a given refer-ence temperature	✓	✓				
Specific Gravity	The ratio of the density of a process fluid at a given temperature to the density of water at a given temperature. The two given temper-ature conditions do not need to be the same.	✓	✓	✓			
Mass Concentration (Density)	The percent mass of solute or of material in suspension in the total solution, derived from reference density	✓	✓		✓	✓	
Mass Concentration (Specific Gravity)	The percent mass of solute or of material in suspension in the total solution, derived from specific gravity	✓	✓	✓	✓	✓	
Volume Concentration (Density)	The percent volume of solute or of material in suspension in the total solution, derived from reference density	✓	✓		✓		✓
Volume Concentration (Specific Gravity)	The percent volume of solute or of material in suspension in the total solution, derived from specific gravity	✓	✓	✓	✓		✓

Derived Variable	Description	Calculated process variables					
		Density at reference tempera-ture	Standard volume flow rate	Specific gravity	Concen-tration	Net mass flow rate	Net volume flow rate
Concentration (Density)	The mass, volume, weight, or number of moles of solute or of material in suspension in proportion to the total solution, derived from reference density	✓	✓		✓		
Concentration (Specific Gravity)	The mass, volume, weight, or number of moles of solute or of material in suspension in proportion to the total solution, derived from specific gravity	✓	✓	✓	✓		

4.9 Configure pressure compensation

Pressure compensation adjusts process measurement to compensate for the pressure effect on the sensor. The pressure effect is the change in the sensor's sensitivity to flow and density caused by the difference between the calibration pressure and the process pressure.

Tip

Not all sensors or applications require pressure compensation. The pressure effect for a specific sensor model can be found in the product data sheet located at *www.emerson.com*. If you are uncertain about implementing pressure compensation, contact customer service.

Prerequisites

You will need the flow factor, density factor, and calibration pressure values for your sensor.

- For the flow factor and density factor, see the product data sheet for your sensor.
- For the calibration pressure, see the calibration sheet for your sensor. If the data is unavailable, use 20 PSI.

4.9.1 Configure pressure compensation using ProLink III

1. Choose **Device Tools** > **Configuration** > **Process Measurement** > **Pressure Compensation**.

2. Set **Pressure Compensation Status** to Enabled.
3. Set **Pressure Unit** to the appropriate unit.

   If you will use an external pressure value, set **Pressure Unit** to match the pressure unit used by the external pressure device.
4. Enter **Flow Calibration Pressure** for your sensor.

   The calibration pressure is the pressure at which your sensor was calibrated, and defines the pressure at which there is no pressure effect. If the data is unavailable, enter 20 PSI.
5. Enter **Flow Factor** for your sensor.

   The flow factor is the percent change in the flow rate per PSI. When entering the value, reverse the sign.

   Example: If the flow factor is 0.000004 % per PSI, enter −0.000004 % per PSI.
6. Enter **Density Factor** for your sensor.

   The density factor is the change in fluid density, in g/cm^3/PSI. When entering the value, reverse the sign.

   Example:

   If the density factor is 0.000006 g/cm^3/PSI, enter −0.000006g/cm3/PSI.
7. Set **Pressure Source** to the method that the transmitter will use to obtain pressure data.

Option	Description
Poll for external value	The transmitter will poll an external pressure device, using HART protocol over the primary mA Output.
Fixed Value or Digital Communications	The transmitter will use the pressure value that it reads from memory. • Fixed Value: The configured value is used. • Digital Communications: A host writes transmitter data to transmitter memory. **Note** If the Weights & Measures application is implemented and the transmitter is secured, digital communications cannot be used to write temperature or pressure data to the transmitter.

8. If you chose to poll for pressure data:

   a. Select the **Polling Slot** to use.

   b. Set **Polling Control** to Poll as Primary or Poll as Secondary, and click **Apply**.

Tip

- Poll as Primary: No other HART masters will be on the network.
- Poll as Secondary: Other HART masters will be on the network. The Field Communicator is not a HART master.

c. Set **External Device Tag** to the HART tag of the external pressure device, and click **Apply**.

d. Ensure that the primary mA Output is wired to support HART communications with the external pressure device.

9. If you chose to use a fixed pressure value:

   a. Set **Fixed Value** to the value to use, and click **Apply**

10. If you want to use digital communications, click **Apply**, then perform the necessary host programming and communications setup to write pressure data to the transmitter at appropriate intervals.

Postrequisites

If you are using an external pressure value, verify the setup by checking the **External Pressure** value displayed in the Inputs area of the main window.

4.9.2 Configure pressure compensation using the Field Communicator

1. Choose **Online** > **Configure** > **Manual Setup** > **Measurements** > **External Pressure/ Temperature** > **Pressure**.
2. Set **Pressure Compensation** to Enabled.
3. Enter **Flow Cal Pressure** for your sensor.

   The calibration pressure is the pressure at which your sensor was calibrated, and defines the pressure at which there is no pressure effect. If the data is unavailable, enter 20 PSI.

4. Enter **Flow Press Factor** for your sensor.

   The flow factor is the percent change in the flow rate per PSI. When entering the value, reverse the sign.

   Example:

   If the flow factor is 0.000004 % per PSI, enter −0.000004 % per PSI.

5. Enter **Dens Press Factor** for your sensor.

   The density factor is the change in fluid density, in g/cm^3/PSI. When entering the value, reverse the sign.

   Example:

   If the density factor is 0.000006 g/cm^3/PSI, enter −0.000006g/cm3/PSI.

6. Determine how the transmitter will obtain pressure data, and perform the required setup.

Option	Setup
A user-configured static pressure value	a. Set **Pressure Unit** to the desired unit. b. Set **Compensation Pressure** to the desired value.
Polling for pressure	a. Ensure that the primary mA Output has been wired to support HART polling. b. Choose **Online** > **Configure** > **Manual Setup** > **Measurements** > **External Pressure/Temperature** > **External Polling** . c. Set **Poll Control** to Poll As Primary Host or Poll as Secondary Host. d. Choose an unused polling slot. e. Set **External Tag** to the HART tag of the external pressure device. f. Set **Polled Variable** to Pressure. **Tip** • Poll as Primary: No other HART masters will be on the network. • Poll as Secondary: Other HART masters will be on the network. The Field Communicator is not a HART master.
A value written by digital communications	a. Set **Pressure Unit** to the desired unit. b. Perform the necessary host programming and communications setup to write pressure data to the transmitter at appropriate intervals. **Note** If the Weights & Measures application is implemented and the transmitter is secured, digital communications cannot be used to write temperature or pressure data to the transmitter.

Postrequisites

If you are using an external pressure value, verify the setup by choosing **Service Tools** > **Variables** > **External Variables** and checking the value displayed for **External Pressure**.

4.9.3 Options for Pressure Measurement Unit

The transmitter provides a standard set of measurement units for **Pressure Measurement Unit**. Different communications tools may use different labels for the units. In most applications, **Pressure Measurement Unit** should be set to match the pressure measurement unit used by the remote device.

Unit description	Label		
	Display	ProLink III	Field Communicator
Feet water @ 68 °F	FTH2O	Ft Water @ 68°F	ftH2O
Inches water @ 4 °C	INW4C	In Water @ 4°C	inH2O @4DegC
Inches water @ 60 °F	INW60	In Water @ 60°F	inH2O @60DegF
Inches water @ 68 °F	INH2O	In Water @ 68°F	inH2O
Millimeters water @ 4 °C	mmW4C	mm Water @ 4°C	mmH2O @4DegC
Millimeters water @ 68 °F	mmH2O	mm Water @ 68°F	mmH2O
Millimeters mercury @ 0 °C	mmHG	mm Mercury @ 0°C	mmHg
Inches mercury @ 0 °C	INHG	In Mercury @ 0°C	inHG
Pounds per square inch	PSI	PSI	psi
Bar	BAR	bar	bar
Millibar	mBAR	millibar	mbar
Grams per square centimeter	G/SCM	g/cm2	g/Sqcm
Kilograms per square centimeter	KG/SCM	kg/cm2	kg/Sqcm
Pascals	PA	pascals	Pa
Kilopascals	KPA	Kilopascals	kPa
Megapascals	MPA	Megapascals	MPa
Torr @ 0 °C	TORR	Torr @ 0°C	torr
Atmospheres	ATM	atms	atms

5 Configure device options and preferences

Topics covered in this chapter:

- *Configure the transmitter display*
- *Enable or disable operator actions from the display*
- *Configure security for the display menus*
- *Configure response time parameters*
- *Configure alert handling*
- *Configure informational parameters*

5.1 Configure the transmitter display

You can control the process variables shown on the display and a variety of display behaviors.

5.1.1 Configure the language used for the display

Display	OFF-LINE MAINT > OFF-LINE CONFG > DISPLAY > LANG
ProLink III	Device Tools > Configuration > Transmitter Display > General
Field Communicator	Configure > Manual Setup > Display > Language

Overview

Display Language controls the language used for process data and menus on the display.

Procedure

Select the language you want to use.

The languages available depend on your transmitter model and version.

5.1.2 Configure the process variables and diagnostic variables shown on the display

Display	Not available
ProLink III	Device Tools > Configuration > Transmitter Display > Display Variables
Field Communicator	Configure > Manual Setup > Display > Display Variables

Overview

You can control the process variables and diagnostic variables shown on the display, and the order in which they appear. The display can scroll through up to 15 variables in any order you choose. In addition, you can repeat variables or leave slots unassigned.

Restrictions

- You cannot set **Display Variable 1** to None or to a diagnostic variable. **Display Variable 1** must be set to a process variable.
- If you have configured **Display Variable 1** to track the primary mA Output, you cannot change the setting of **Display Variable 1** using this procedure. To change the setting of **Display Variable 1**, you must change the configuration of **mA Output Process Variable** for the primary mA Output.

Note

If you configure a display variable as a volume process variable and then change **Volume Flow Type**, the display variable is automatically changed to the equivalent process variable. For example, Volume Flow Rate would be changed to Gas Standard Volume Flow Rate.

Procedure

For each display variable you want to change, assign the process variable you want to use.

Example: Default display variable configuration

Display variable	Process variable assignment
Display Variable 1	Mass flow
Display Variable 2	Mass total
Display Variable 3	Volume flow
Display Variable 4	Volume total
Display Variable 5	Density
Display Variable 6	Temperature
Display Variable 7	Drive gain
Display Variable 8	None
Display Variable 9	None
Display Variable 10	None
Display Variable 11	None
Display Variable 12	None
Display Variable 13	None
Display Variable 14	None
Display Variable 15	None

Configure Display Variable 1 to track the primary mA Output

Display	**OFF-LINE MAINT** > **OFF-LINE CONFG** > **DISPLAY** > **DISPLAY VAR 1** > **AO 1 SRC**
ProLink III	**Device Tools** > **Configuration** > **Transmitter Display** > **Display Security**
Field Communicator	Not available

Overview

You can configure **Display Variable 1** to track **mA Output Process Variable** for the primary mA Output. When tracking is enabled, you can control **Display Variable 1** from the display menu.

Tip

This feature is the only way to configure a display variable from the display menus, and it applies only to **Display Variable 1**.

Procedure

Configure **Display Variable 1** to track the primary mA Output.

Display Variable 1 will automatically be set to match **mA Output Process Variable** for the primary mA Output. If you change the configuration of **mA Output Process Variable**, **Display Variable 1** will be updated automatically.

5.1.3 Configure the number of decimal places (precision) shown on the display

Display	Not available
ProLink III	**Device Tools** > **Configuration** > **Transmitter Display** > **Display Variables**
Field Communicator	**Configure** > **Manual Setup** > **Display** > **Decimal Places**

Overview

You can specify the number of decimal places (precision) that are shown on the display for each process variable or diagnostic variable. You can set the precision independently for each variable.

The display precision does not affect the actual value of the variable or the value used in calculations.

Procedure

1. Select a variable.
2. Set **Number of Decimal Places** to the number of decimal places you want shown when the process variable or diagnostic variable appears on the display.

For temperature and density process variables, the default value is 2 decimal places. For all other variables, the default value is 4 decimal places. The range is 0 to 5.

Tip

The lower the precision, the greater the change must be for it to be reflected on the display. Do not set the precision too low or too high to be useful.

5.1.4 Configure the refresh rate of data shown on the display

Display	OFF-LINE MAINT > OFF-LINE CONFG > DISPLAY > DISPLAY RATE
Field Communicator	Configure > Manual Setup > Display > Display Variable Menu Features > Refresh Rate

Overview

You can set **Refresh Rate** to control how frequently data is refreshed on the display.

Procedure

Set **Refresh Rate** to the desired value.

The default value is 200 milliseconds. The range is 100 milliseconds to 10,000 milliseconds (10 seconds).

5.1.5 Enable or disable automatic scrolling through the display variables

Display	OFF-LINE MAINT > OFF-LINE CONFG > DISPLAY > AUTO SCRLL
ProLink III	Device Tools > Configuration > Transmitter Display > General
Field Communicator	Configure > Manual Setup > Display > Display Variable Menu Features > Auto Scroll

Overview

You can configure the display to automatically scroll through the configured display variables or to show a single display variable until the operator activates **Scroll**. When you set automatic scrolling, you can also configure the length of time each display variable is displayed.

Procedure

1. Enable or disable **Auto Scroll** as desired.

Option	Description
Enabled	The display automatically scrolls through each display variable as specified by **Scroll Rate**. The operator can move to the next display variable at any time using **Scroll**.

Option	Description
Disabled (default)	The display shows **Display Variable 1** and does not scroll automatically. The operator can move to the next display variable at any time using **Scroll**.

2. If you enabled **Auto Scroll**, set **Scroll Rate** as desired.

   The default value is 10 seconds.

Tip
Scroll Rate may not be available until you apply **Auto Scroll**.

5.1.6 Enable or disable the display backlight

Display	**OFF-LINE MAINT** > **OFF-LINE CONFG** > **DISPLAY** > **BKLT**
ProLink III	**Device Tools** > **Configuration** > **Transmitter Display** > **General**
Field Communicator	**Configure** > **Manual Setup** > **Display** > **Backlight**

Overview

You can enable or disable the display backlight.

Procedure

Enable or disable **Backlight**.

The default setting is Enabled.

5.1.7 Enable or disable Status LED Blinking

Display	Not available
ProLink III	**Device Tools** > **Configuration** > **Transmitter Display** > **General**
Field Communicator	**Configure** > **Manual Setup** > **Display** > **Display Variable Menu Features** > **Status LED Blinking**

Overview

By default, the status LED blinks (flashes) to indicate unacknowledged alarms. If you disable **Status LED Blinking**, the status LED does not blink, whether alarms are acknowledged or not. It still changes color to indicate active alarms.

Procedure

Enable or disable **Status LED Blinking**.

The default setting is Enabled.

5.2 Enable or disable operator actions from the display

You can configure the transmitter to let the operator perform specific actions using the display.

- *Enable or disable Totalizer Start/Stop from the display* (Section 5.2.1)
- *Enable or disable Totalizer Reset from the display* (Section 5.2.2)
- *Enable or disable the Acknowledge All Alerts display command* (Section 5.2.3)

5.2.1 Enable or disable Totalizer Start/Stop from the display

Display	**OFF-LINE MAINT** > **OFF-LINE CONFG** > **DISPLAY** > **TOTALS STOP**
ProLink III	**Device Tools** > **Configuration** > **Totalizer Control Methods**
Field Communicator	**Configure** > **Manual Setup** > **Display** > **Display Variable Menu Features** > **Start/Stop Totals**

Overview

You can control whether or not the operator is able to start and stop totalizers and inventories from the display.

Restrictions

- You cannot start and stop totalizers individually from the display. All totalizers are started or stopped together.
- You cannot start or stop inventories separately from totalizers. When a totalizer is started or stopped, the associated inventory is also started or stopped.
- If the petroleum measurement application is installed, the operator must enter the off-line password to perform this function, even if the off-line password is not enabled.

Procedure

1. Ensure that at least one totalizer is configured as a display variable.
2. Enable or disable **Totalizer Reset** as desired.

Option	Description
Enabled	Operators can start and stop totalizers and inventories from the display, if at least one totalizer is configured as a display variable.
Disabled (default)	Operators cannot start and stop totalizers and inventories from the display.

5.2.2 Enable or disable Totalizer Reset from the display

Display	OFF-LINE MAINT > OFF-LINE CONFG > DISPLAY > TOTALS RESET
ProLink III	Device Tools > Configuration > Totalizer Control Methods
Field Communicator	Configure > Manual Setup > Display > Display Variable Menu Features > Totalizer Reset

Overview

You can configure whether or not the operator is able to reset totalizers from the display.

Restrictions

- This parameter does not apply to inventories. You cannot reset inventories from the display.
- You cannot use the display to reset all totalizers as a group. You must reset totalizers individually.
- If the petroleum measurement application is installed, the operator must enter the off-line password to perform this function, even if the off-line password is not enabled.

Procedure

1. Ensure that the totalizers you want to reset have been configured as display variables.

   If the totalizer is not configured as a display variable, the operator will not be able to reset it.
2. Enable or disable resetting the totalizer as desired.

Option	Description
Enabled	Operators can reset a totalizer from the display, if the totalizer is configured as a display variable.
Disabled (default)	Operators cannot reset totalizers from the display.

5.2.3 Enable or disable the Acknowledge All Alerts display command

Display	OFF-LINE MAINT > OFF-LINE CONFG > DISPLAY > DISPLAY ACK
ProLink III	Device Tools > Configuration > Transmitter Display > Ack All
Field Communicator	Configure > Manual Setup > Display > Offline Variable Menu Features > Acknowledge All

Overview

You can configure whether or not the operator can use a single command to acknowledge all alerts from the display.

Procedure

1. Ensure that the alert menu is accessible from the display.

   To acknowledge alerts from the display, operators must have access to the alert menu.

2. Enable or disable **Acknowledge All Alerts** as desired.

Option	Description
Enabled (default)	Operators can use a single display command to acknowledge all alerts at once.
Disabled	Operators cannot acknowledge all alerts at once. Each alert must be acknowledged separately.

5.3 Configure security for the display menus

Display	**OFF-LINE MAINT** > **OFF-LINE CONFG** > **DISPLAY**
ProLink III	**Device Tools** > **Configuration** > **Transmitter Display** > **Display Security**
Field Communicator	**Configure** > **Manual Setup** > **Display** > **Offline Variable Menu Features**

Overview

You can control operator access to different sections of the display off-line menu. You can also configure a password to control access.

Procedure

1. To control operator access to the maintenance section of the off-line menu, enable or disable **Off-Line Menu**.

Option	Description
Enabled (default)	Operator can access the maintenance section of the off-line menu. This access is required for configuration and calibration, but is not required to view alerts or to access Smart Meter Verification (if applicable).
Disabled	Operator cannot access the maintenance section of the off-line menu.

2. To control operator access to the alert menu, enable or disable **Alert Menu**.

Option	Description
Enabled (default)	Operator can access the alert menu. This access is required to view and acknowledge alerts, but is not required for Smart Meter Verification (if applicable), configuration, or calibration.

Option	Description
Disabled	Operator cannot access the alert menu.

Note
The transmitter status LED changes color to indicate that there are active alerts, but does not show specific alerts.

3. To require a password for access to the maintenance section of the off-line menu and the Smart Meter Verification menu, enable or disable **Off-Line Password**.

Option	Description
Enabled	Operator is prompted for the off-line password at entry to the Smart Meter Verification menu (if applicable) or entry to the maintenance section of the off-line menu.
Disabled (default)	No password is required for entry to the Smart Meter Verification menu (if applicable) or entry to the maintenance section of the off-line menu.

4. To require a password to access the alert menu, enable or disable **Alert Password**.

Option	Description
Enabled	Operator is prompted for the off-line password at entry to the alert menu.
Disabled (default)	No password is required for entry to the alert menu.

If both **Off-Line Password** and **Alert Password** are enabled, the operator is prompted for the off-line password to access the off-line menu, but is not prompted thereafter.

5. Set **Off-Line Password** to the desired value.

   The default value is 1234. The range is 0000 to 9999.

   The same value is used for both the off-line password and the alert password.

Tip
Record your password for future reference.

5.4 Configure response time parameters

You can configure the rate at which process data is polled and process variables are calculated.

5.4.1 Configure Update Rate

Display	Not available
ProLink III	**Device Tools** > **Configuration** > **Process Measurement** > **Response** > **Update Rate**
Field Communicator	**Configure** > **Manual Setup** > **Measurements** > **Update Rate**

Overview

Update Rate controls the rate at which process data is polled and process variables are calculated. **Update Rate** = Special produces faster and "noisier" response to changes in the process. Do not use Special mode unless required by your application.

Tip

For systems with a standard core processor, Special mode can improve performance for applications with entrained air or Empty-Full-Empty conditions. This does not apply to systems with an enhanced core processor.

Prerequisites

Before setting **Update Rate** to Special:

- Check the effects of Special mode on specific process variables.
- Contact customer support.

Procedure

1. Set **Update Rate** as desired.

Option	Description
Normal	All process data is polled at the rate of 20 times per second (20 Hz). All process variables are calculated at 20 Hz. This option is appropriate for most applications.
Special	A single, user-specified process variable is polled at the rate of 100 times per second (100 Hz). Other process data is polled at 6.25 Hz. Some process, diagnostic, and calibration data is not polled. All available process variables are calculated at 100 Hz. Use this option only if required by your application.

If you change **Update Rate**, the settings for **Flow Damping**, **Density Damping**, and **Temperature Damping** are automatically adjusted.

2. If you set **Update Rate** to Special, select the process variable to be polled at 100 Hz.

Effects of Update Rate = Special

Incompatible features and functions

Special mode is not compatible with the following features and functions:

- Enhanced events. Use basic events instead.
- All calibration procedures.
- Zero verification.
- Restoring the factory zero or the prior zero.

If required, you can switch to Normal mode, perform the desired procedures, and then return to Special mode.

Process variable updates

Some process variables are not updated when Special mode is enabled.

Table 5-1: Special mode and process variable updates

Always polled and updated	Updated only when the petroleum measurement application is disabled	Never updated
• Mass flow • Volume flow • Gas standard volume flow • Density • Temperature • Drive gain • LPO amplitude • Status [contains Event 1 and Event 2 (basic events)] • Mass total • Volume total • Live zero • Gas standard volume total • Temperature-corrected volume total • Temperature-corrected density • Temperature-corrected volume flow • Batch-weighted average temperature • Batch-weighted average density	• RPO amplitude • Core input voltage • Mass inventory • Volume inventory • Gas standard volume inventory	All other process variables and calibration data. They retain the values held at the time you enabled Special mode.

5.4.2 Configure Response Time

Display	Not available
ProLink III	**Device Tools** > **Configuration** > **Process Measurement** > **Response** > **Response Time**
Field Communicator	Not available

Overview

Response Time is used to apply a different algorithm to the calculation of process variables from the raw process data.

Restriction

Response Time is available only on systems with the enhanced core processor.

Procedure

Set **Response Time** as desired.

Option	Description
Normal (Legacy)	Transmitter calculates process variables at the standard speed. This option is selected if this parameter was configured on an earlier version of ProLink III software.
Special (Legacy)	Transmitter calculates process variables at a faster speed. This option is selected if this parameter was configured on an earlier version of ProLink III software.
Normal - Optimal Filtering	Transmitter calculates process variables at standard filtering and speed.
Low Filtering - Fastest Response	Transmitter calculates process variables at the fastest speed.
High Filtering - Smoothest Output	Transmitter calculates process variables at the smoothest (least noisy) response to changes in the process.
Service	For factory use only.

5.5 Configure alert handling

The alert handling parameters control the transmitter's response to process and device conditions.

5.5.1 Configure Fault Timeout

Display	Not available
ProLink III	**Device Tools** > **Configuration** > **Fault Processing**
Field Communicator	**Configure** > **Alert Setup** > **Alert Severity** > **Fault Timeout**

Overview

Fault Timeout controls the delay before fault actions are performed.

Restriction

Fault Timeout is applied only to the following alerts (listed by Status Alert Code): A003, A004, A005, A008, A016, A017, A033. For all other alerts, fault actions are performed as soon as the alert is detected.

Procedure

Set **Fault Timeout** as desired.

The default value is 0 seconds. The range is 0 to 60 seconds.

If you set **Fault Timeout** to 0, fault actions are performed as soon as the alert condition is detected.

The fault timeout period begins when the transmitter detects an alert condition. During the fault timeout period, the transmitter continues to report its last valid measurements.

If the fault timeout period expires while the alert is still active, the fault actions are performed. If the alert condition clears before the fault timeout expires, no fault actions are performed.

5.5.2 Configure Status Alert Severity

Display	Not available
ProLink III	**Device Tools** > **Configuration** > **Alert Severity**
Field Communicator	**Configure** > **Alert Setup** > **Alert Severity** > **Set Alert Severity**

Overview

Use **Status Alert Severity** to control the fault actions that the transmitter performs when it detects an alert condition.

Restrictions

- For some alerts, **Status Alert Severity** is not configurable.
- For some alerts, **Status Alert Severity** can be set only to two of the three options.

Tip
Use the default settings for **Status Alert Severity** unless you have a specific requirement to change them.

Procedure

1. Select a status alert.
2. For the selected status alert, set **Status Alert Severity** as desired.

Option	Description
Fault	Actions when fault is detected: • The alert is posted to the Alert List. • Outputs go to the configured fault action (after **Fault Timeout** has expired, if applicable). • Digital communications go to the configured fault action (after **Fault Timeout** has expired, if applicable). • The status LED (if available) changes to red or yellow (depending on alert severity). Actions when alert clears: • Outputs return to normal behavior. • Digital communications return to normal behavior. • The status LED (if available) returns to green and may or may not flash.
Informational	Actions when fault is detected: • The alert is posted to the Alert List. • The status LED (if available) changes to red or yellow (depending on alert severity). Actions when alert clears: • The status LED (if available) returns to green and may or may not flash.
Ignore	No action

Status alerts and options for Status Alert Severity

Table 5-2: Status alerts and Status Alert Severity

Alert code	Status message	Default severity	Notes	Configurable?
A001	EEPROM Error (Core Processor)	Fault		No
A002	RAM Error (Core Processor)	Fault		No
A003	No Sensor Response	Fault		Yes
A004	Temperature Overrange	Fault		No
A005	Mass Flow Rate Overrange	Fault		Yes
A006	Characterization Required	Fault		Yes
A008	Density Overrange	Fault		Yes

Table 5-2: Status alerts and Status Alert Severity *(continued)*

Alert code	Status message	Default severity	Notes	Configurable?
A009	Transmitter Initializing/ Warming Up	Fault		Yes
A010	Calibration Failure	Fault		No
A011	Zero Calibration Failed: Low	Fault		Yes
A012	Zero Calibration Failed: High	Fault		Yes
A013	Zero Calibration Failed: Unstable	Fault		Yes
A014	Transmitter Failure	Fault		No
A016	Sensor RTD Failure	Fault		Yes
A017	T-Series RTD Failure	Fault		Yes
A018	EEPROM Error (Transmitter)	Fault		No
A019	RAM Error (Transmitter)	Fault		No
A020	No Flow Cal Value	Fault		Yes
A021	Incorrect Sensor Type (K1)	Fault		No
A022	Configuration Database Corrupt (Core Processor)	Fault	Applies only to flowmeters with the standard core processor.	No
A023	Internal Totals Corrupt (Core Processor)	Fault	Applies only to flowmeters with the standard core processor.	No
A024	Program Corrupt (Core Processor)	Fault	Applies only to flowmeters with the standard core processor.	No
A025	Boot Sector Fault (Core Processor)	Fault	Applies only to flowmeters with the standard core processor.	No
A026	Sensor/Transmitter Communications Failure	Fault		No
A027	Security Breach	Fault		No
A028	Core Processor Write Failure	Fault		No
A031	Low Power	Fault	Applies only to flowmeters with the enhanced core processor.	No
A032	Meter Verification in Progress: Outputs to Fault	Varies	Applies only to transmitters with Smart Meter Verification. If outputs are set to Last Measured Value, severity is Info. If outputs are set to Fault, severity is Fault.	No
A033	Insufficient Right/Left Pick-off Signal	Fault	Applies only to flowmeters with the enhanced core processor.	Yes

Table 5-2: Status alerts and Status Alert Severity *(continued)*

Alert code	Status message	Default severity	Notes	Configurable?
A034	Meter Verification Failed	Fault	Applies only to transmitters with Smart Meter Verification.	Yes
A035	Meter Verification Aborted	Fault	Applies only to transmitters with Smart Meter Verification.	Yes
A100	mA Output 1 Saturated	Informational	Can be set to either Informational or Ignore, but cannot be set to Fault.	Yes
A101	mA Output 1 Fixed	Informational	Can be set to either Informational or Ignore, but cannot be set to Fault.	Yes
A102	Drive Overrange	Informational		Yes
A103	Data Loss Possible (Totals and Inventories)	Informational	Applies only to flowmeters with the enhanced core processor. Can be set to either Informational or Ignore, but cannot be set to Fault.	Yes
A104	Calibration in Progress	Informational	Can be set to either Informational or Ignore, but cannot be set to Fault.	Yes
A105	Slug Flow	Informational		Yes
A106	Burst Mode Enabled	Informational	Can be set to either Informational or Ignore, but cannot be set to Fault.	Yes
A107	Power Reset Occurred	Informational	Normal transmitter behavior; occurs after every power cycle.	Yes
A108	Basic Event 1 On	Informational	Applies only to basic events.	Yes
A109	Basic Event 2 On	Informational	Applies only to basic events.	Yes
A110	Frequency Output Saturated	Informational	Can be set to either Informational or Ignore, but cannot be set to Fault.	Yes
A111	Frequency Output Fixed	Informational	Can be set to either Informational or Ignore, but cannot be set to Fault.	Yes
A112	Upgrade Transmitter Software	Informational	Applies only to systems with transmitter software earlier than v5.0.	Yes
A113	mA Output 2 Saturated	Informational	Can be set to either Informational or Ignore, but cannot be set to Fault.	Yes
A114	mA Output 2 Fixed	Informational	Can be set to either Informational or Ignore, but cannot be set to Fault.	Yes
A115	No External Input or Polled Data	Informational		Yes
A118	Discrete Output 1 Fixed	Informational	Can be set to either Informational or Ignore, but cannot be set to Fault.	Yes
A119	Discrete Output 2 Fixed	Informational	Can be set to either Informational or Ignore, but cannot be set to Fault.	Yes

Table 5-2: Status alerts and Status Alert Severity *(continued)*

Alert code	Status message	Default severity	Notes	Configurable?
A120	Curve Fit Failure (Concentration)	Informational	Applies only to transmitters with the concentration measurement application.	No
A121	Extrapolation Alarm (Concentration)	Informational	Applies only to transmitters with the concentration measurement application.	Yes
A131	Meter Verification in Progress: Outputs to Last Measured Value	Informational	Applies only to transmitters with Smart Meter Verification.	Yes
A132	Sensor Simulation Active	Informational	Applies only to flowmeters with the enhanced core processor. Can be set to either Informational or Ignore, but cannot be set to Fault.	To Informational or Ignore only
A141	DDC trigger(s) have completed	Informational	Applies only to flowmeters with the enhanced core processor. Can be set to either Informational or Ignore, but cannot be set to Fault.	Yes

5.6 Configure informational parameters

The informational parameters can be used to identify or describe your meter. They are not used in process measurement and they are not required.

5.6.1 Configure Sensor Serial Number

Display	Not available
ProLink III	**Device Tools** > **Configuration** > **Informational Parameters** > **Sensor**
Field Communicator	**Configure** > **Manual Setup** > **Info Parameters** > **Sensor Information** > **Sensor Serial Number**

Overview

Sensor Serial Number lets you store the serial number of the sensor component of your flowmeter in transmitter memory. This parameter is not used in processing and is not required.

Procedure

1. Obtain the sensor serial number from your sensor tag.
2. Enter the serial number in the **Sensor Serial Number** field.

5.6.2 Configure Sensor Material

Display	Not available
ProLink III	**Device Tools** > **Configuration** > **Informational Parameters** > **Sensor**
Field Communicator	**Configure** > **Manual Setup** > **Info Parameters** > **Sensor Information** > **Tube Wetted Material**

Overview

Sensor Material lets you store the type of material used for your sensor's wetted parts in transmitter memory. This parameter is not used in processing and is not required.

Procedure

1. Obtain the material used for your sensor's wetted parts from the documents shipped with your sensor, or from a code in the sensor model number.

   To interpret the model number, refer to the product data sheet for your sensor.
2. Set **Sensor Material** to the appropriate option.

5.6.3 Configure Sensor Liner Material

Display	Not available
ProLink III	**Device Tools** > **Configuration** > **Informational Parameters** > **Sensor**
Field Communicator	**Configure** > **Manual Setup** > **Info Parameters** > **Sensor Information** > **Tube Lining**

Overview

Sensor Liner Material lets you store the type of material used for your sensor liner in transmitter memory. This parameter is not used in processing and is not required.

Procedure

1. Obtain your sensor's liner material from the documents shipped with your sensor, or from a code in the sensor model number.

   To interpret the model number, refer to the product data sheet for your sensor.
2. Set **Sensor Liner Material** to the appropriate option.

5.6.4 Configure Sensor Flange Type

Display	Not available
ProLink III	**Device Tools** > **Configuration** > **Informational Parameters** > **Sensor**
Field Communicator	**Configure** > **Manual Setup** > **Info Parameters** > **Sensor Information** > **Sensor Flange**

Overview

Sensor Flange Type lets you store your sensor's flange type in transmitter memory. This parameter is not used in processing and is not required.

Procedure

1. Obtain your sensor's flange type from the documents shipped with your sensor, or from a code in the sensor model number.

   To interpret the model number, refer to the product data sheet for your sensor.
2. Set **Sensor Flange Type** to the appropriate option.

5.6.5 Configure Descriptor

Display	Not available
ProLink III	**Device Tools** > **Configuration** > **Informational Parameters** > **Transmitter**
Field Communicator	**Configure** > **Manual Setup** > **Info Parameters** > **Transmitter Info** > **Descriptor**

Overview

Descriptor lets you store a description in transmitter memory. The description is not used in processing and is not required.

Procedure

Enter a description for the transmitter or device

You can use up to 16 characters for the description.

5.6.6 Configure Message

Display	Not available
ProLink III	**Device Tools** > **Configuration** > **Informational Parameters** > **Transmitter**
Field Communicator	**Configure** > **Manual Setup** > **Info Parameters** > **Transmitter Info** > **Message**

Overview

Message lets you store a short message in transmitter memory. This parameter is not used in processing and is not required.

Procedure

Enter a short message for the transmitter or device.

Your message can be up to 32 characters long.

5.6.7 Configure Date

Display	Not available
ProLink III	**Device Tools** > **Configuration** > **Informational Parameters** > **Transmitter**
Field Communicator	**Configure** > **Manual Setup** > **Info Parameters** > **Transmitter Info** > **Date**

Overview

Date lets you store a static date (not updated by the transmitter) in transmitter memory. This parameter is not used in processing and is not required.

Procedure

Enter the date you want to use, in the form *mm/dd/yyyy*.

Tip
ProLink III provides a calendar tool to help you select the date.

6 Integrate the meter with the control system

Topics covered in this chapter:

- *Configure the transmitter channels*
- *Configure the mA Output*
- *Configure the Frequency Output*
- *Configure the Discrete Output*
- *Configure the Discrete Input*
- *Configure events*
- *Configure digital communications*

6.1 Configure the transmitter channels

Display	OFF-LINE MAINT > OFF-LINE CONFG > IO > CONFIG CH B OFF-LINE MAINT > OFF-LINE CONFG > IO > CONFIG CH C
ProLink III	Device Tools > Configuration > I/O > Channels
Field Communicator	Configure > Manual Setup > Inputs/Outputs > Channels > Channel B Configure > Manual Setup > Inputs/Outputs > Channels > Channel C

Overview

You can configure the channels on your transmitter to operate in several ways. The channel configuration must match the wiring at the transmitter terminals.

Note

Channel A always operates as an internally-powered mA Output. If Channel B is configured as an mA Output, it is internally powered.

Important

If you need both a Frequency Output and a Discrete Output, you must first configure Channel B as the Frequency Output, then configure Channel C as the Discrete Output. Other combinations are invalid and will be rejected by the transmitter.

Prerequisites

To avoid causing process errors:

- Configure the channels before configuring the outputs.

- Before changing the channel configuration, ensure that all control loops affected by the channel are under manual control.

Important

Before configuring a channel to operate as a Discrete Input, check the status of the remote input device and the actions assigned to the Discrete Input. If the Discrete Input is ON, all actions assigned to the Discrete Input will be performed when the new channel configuration is implemented. If this is not acceptable, change the state of the remote device or wait to configure the channel as a Discrete Input until an appropriate time.

Procedure

1. Set Channel B as desired.

Option	Description
Secondary mA Output	Channel B will operate as an mA Output.
Frequency Output	Channel B will operate as a Frequency Output.
Discrete Output	Channel B will operate as a Discrete Output.

2. If you set Channel B to operate as a Frequency Output or Discrete Output, configure the power source for the channel.

Option	Description
Internal (Active)	The channel is powered by the transmitter.
External (Passive)	The channel is powered by an external power source.

3. Set Channel C as desired.

Option	Description
Frequency Output	Channel C will operate as a Frequency Output.
Discrete Output	Channel C will operate as a Discrete Output.
Discrete Input	Channel C will operate as a Discrete Input.

4. Configure the power source for Channel C.

Option	Description
Internal (Active)	The channel is powered by the transmitter.
External (Passive)	The channel is powered by an external power source.

Postrequisites

For each channel that you configured, perform or verify the corresponding input or output configuration. When the configuration of a channel is changed, the channel's behavior will be controlled by the configuration that is stored for the selected input or output type, and the stored configuration may not be appropriate for your process.

After verifying channel and output configuration, return the control loop to automatic control.

6.2 Configure the mA Output

The mA Output is used to report the configured process variable. The mA Output parameters control how the process variable is reported.

Your transmitter may have one or two mA Outputs:

- Channel A is always an mA Output (the primary mA Output).
- Channel B can be configured as an mA Output (the secondary mA Output).

Important

Whenever you change an mA Output parameter, verify all other mA Output parameters before returning the meter to service. In some situations, the transmitter automatically loads a set of stored values, and these values may not be appropriate for your application.

6.2.1 Configure mA Output Process Variable

Display	OFF-LINE MAINT > OFF-LINE CONFG > IO > CONFIG CH A > AO 1 SRC OFF-LINE MAINT > OFF-LINE CONFG > IO > CONFIG CH B > SET MAO > AO 2 SRC
ProLink III	Device Tools > Configuration > I/O > Outputs > mA Output
Field Communicator	Configure > Manual Setup > Inputs/Outputs > mA Output 1 > Primary Variable Configure > Manual Setup > Inputs/Outputs > mA Output 2 > Secondary Variable

Overview

Use **mA Output Process Variable** to select the variable that is reported over the mA Output. The mA and frequency outputs are configured independently. You can assign one process variable to the mA Output and a different process variable to the Frequency Output.

Prerequisites

- If you plan to configure the output to report volume flow, ensure that you have set **Volume Flow Type** as desired: Liquid or Gas Standard Volume.
- If you plan to configure an output to report a concentration measurement process variable, ensure that the concentration measurement application is configured so that the desired variable is available.

- If you are using the HART variables, be aware that changing the configuration of **mA Output Process Variable** will change the configuration of the HART Primary Variable (PV) and/or the HART Secondary Variable (SV).
- If you have configured **Display Variable 1** to track **mA Output Process Variable**, be aware that changing the configuration of **mA Output Process Variable** will change the contents of **Display Variable 1**.

Procedure

Set **mA Output Process Variable** as desired.

Default settings are as follows:

- Primary mA Output: Mass Flow Rate
- Secondary mA Output: Density

Postrequisites

If you changed the setting of **mA Output Process Variable**, verify the settings of **Lower Range Value** (LRV) and **Upper Range Value** (URV).

Options for mA Output Process Variable

The transmitter provides a basic set of options for **mA Output Process Variable**, plus several application-specific options. Different communications tools may use different labels for the options.

Table 6-1: Standard mA Output process variables

Process variable	Label		
	Display	**ProLink III**	**Field Communicator**
Density	DENS	Density	Dens
Drive gain	DGAIN	Drive Gain	Driv signl
External pressure	EXT P	External Pressure	External pres
External temperature	EXT T	External Temperature	External temp
Gas standard volume flow rate	GSV F	Gas Standard Volume Flow Rate	Gas vol flo
Mass flow rate	MFLOW	Mass Flow Rate	Mass flo
Temperature	TEMP	Temperature	Temp
Volume flow rate	VFLOW	Volume Flow Rate	Vol flo

Table 6-2: Petroleum measurement mA Output process variables

Process variable	Label		
	Display	**ProLink III**	**Field Communicator**
Average corrected density	AVE D	Average Density	TC Avg Dens

Table 6-2: Petroleum measurement mA Output process variables *(continued)*

Process variable	Label		
	Display	**ProLink III**	**Field Communicator**
Average temperature	AVE T	Average Temperature	TC Avg Temp
Temperature-corrected (standard) volume flow rate	TCVOL	Volume Flow Rate at Reference Temperature	TC Vol
Temperature-corrected density	TCDEN	Density at Reference Tempera-ture	TC Dens

Table 6-3: Concentration measurement mA Output process variables

Process variable	Label		
	Display	**ProLink III**	**Field Communicator**
Baume	BAUME	Baume	ED Dens (Baume)
Concentration	CONC	Concentration	ED Concentration
Density at reference	RDENS	Density at Reference Tempera-ture	ED Dens at Ref
Net mass flow rate	NET M	Net Mass Flow Rate	ED Net Mass flo
Net volume flow rate	NET V	Net Volume Flow Rate	ED Net Vol flo
Specific gravity	SGU	Density (Fixed SG Units)	ED Dens (SGU)
Standard volume flow rate	STD V	Volume Flow Rate at Reference Temperature	ED Std Vol flo

Table 6-4: Fuel consumption mA Output process variables

Process variable	Label		
	Display	**ProLink III**	**Field Communicator**
Differential mass flow	DFLOW	Differential Mass Flow Rate	Differential Mass Flow Rate

Table 6-5: PVR mA Output process variables

Process variable	Label		
	Display	**ProLink III**	**Field Communicator**
Uncorrected oil flow	OIL	Oil Flow Rate At Line	Oil Flow Rate at Line
Uncorrected water cut	WATER%	Water Cut At Line	Water Cut at Line
Uncorrected water flow	WATER	Water Flow Rate At Line	Water Flow Rate at Line
Corrected oil flow	OIL60	Oil Flow Rate At Reference	Oil Flow Rate at Reference
Corrected water cut	WCT60%	Water Cut At Reference	Water Cut at Reference
Corrected water flow	WTR60	Water Flow Rate At Reference	Water Flow Rate at Reference

Table 6-5: PVR mA Output process variables *(continued)*

Process variable	Label		
	Display	**ProLink III**	**Field Communicator**
Shrinkage factor corrected net oil at line	SFOIL	SF Oil Flow Rate At Line	Shrinkage Factor Oil Flow Rate at Line
Shrinkage factor corrected net oil at 60F	SFO60	SF Oil Flow Rate At Reference	Shrinkage Factor Oil Flow Rate at Reference
Shrinkage factor corrected volume of mix at 60F	SFM60	SF Volume Flow Rate At Reference	Shrinkage Factor Volume Flow Rate at Reference

6.2.2 Configure Lower Range Value (LRV) and Upper Range Value (URV)

Display	• OFF-LINE MAINT > OFF-LINE CONFG > IO > CONFIG CH A > AO 1 4 mA • OFF-LINE MAINT > OFF-LINE CONFG > IO > CONFIG CH A > AO 1 20 mA • OFF-LINE MAINT > OFF-LINE CONFG > IO > CONFIG CH B > SET MAO > AO 2 4 mA • OFF-LINE MAINT > OFF-LINE CONFG > IO > CONFIG CH B > SET MAO > AO 2 20 mA
ProLink III	Device Tools > Configuration > I/O > Outputs > mA Output
Field Communicator	• Configure > Manual Setup > Inputs/Outputs > mA Output 1 > mA Output Settings > PV LRV • Configure > Manual Setup > Inputs/Outputs > mA Output 1 > mA Output Settings > PV URV • Configure > Manual Setup > Inputs/Outputs > mA Output 2 > mA Output Settings > SV LRV • Configure > Manual Setup > Inputs/Outputs > mA Output 2 > mA Output Settings > SV URV

Overview

The **Lower Range Value** (LRV) and **Upper Range Value** (URV) are used to scale the mA Output, that is, to define the relationship between **mA Output Process Variable** and the mA Output level.

Note

For transmitter software v5.0 and later, if you change **LRV** and **URV** from the factory default values, and you later change **mA Output Process Variable**, **LRV** and **URV** will not reset to the default values.

For example, if you set **mA Output Process Variable** to Mass Flow Rate and change the **LRV** and **URV**, then you set **mA Output Process Variable** to Density, and finally you change **mA Output Process Variable** back to Mass Flow Rate, **LRV** and **URV** for Mass Flow Rate reset to the values that you configured. In earlier versions of the transmitter software, **LRV** and **URV** reset to the factory default values.

Prerequisites

Ensure that **mA Output Process Variable** is set to the desired process variable. Each process variable has its own set of **LRV** and **URV** values. When you change the values of **LRV** and **URV**, you are configuring values for the currently assigned mA Output process variable.

Ensure that the measurement unit for the configured process variable has been set as desired.

Procedure

Set **LRV** and **URV** as desired.

- **LRV**is the value of **mA Output Process Variable** represented by an output of 4 mA. The default value for **LRV** depends on the setting of **mA Output Process Variable**. Enter **LRV** in the measurement units that are configured for **mA Output Process Variable**.
- **URV** is the value of **mA Output Process Variable** represented by an output of 20 mA. The default value for **URV** depends on the setting of **mA Output Process Variable**. Enter **URV** in the measurement units that are configured for **mA Output Process Variable**.

Tip

For best performance:

- Set **LRV** ≥ **LSL** (lower sensor limit).
- Set **URV** ≤ **USL** (upper sensor limit).
- Set these values so that the difference between **URV** and **LRV** is ≥ **Min Span** (minimum span).

Defining **URV** and **LRV** within the recommended values for **Min Span**, **LSL**, and **USL** ensures that the resolution of the mA Output signal is within the range of the bit precision of the D/A converter.

The mA Output uses a range of 4–20 mA to represent **mA Output Process Variable**. Between **LRV** and **URV**, the mA Output is linear with the process variable. If the process variable drops below **LRV** or rises above **URV**, the transmitter posts an output saturation alert.

Default values for Lower Range Value (LRV) and Upper Range Value (URV)

Each option for **mA Output Process Variable** has its own **LRV** and **URV**. If you change the configuration of **mA Output Process Variable**, the corresponding **LRV** and **URV** are loaded and used.

Table 6-6: Default values for Lower Range Value (LRV) and Upper Range Value (URV)

Process variable	LRV	URV
All mass flow variables	–200.000 g/sec	200.000 g/sec
All liquid volume flow variables	–0.200 l/sec	0.200 l/sec
All density variables	0.000 g/cm^3	10.000 g/cm^3
All temperature variables	–240.000 °C	450.000 °C

Table 6-6: Default values for Lower Range Value (LRV) and Upper Range Value (URV) *(continued)*

Process variable	LRV	URV
Drive gain	0.00%	100.00%
Gas standard volume flow	–423.78 SCFM	423.78 SCFM
External temperature	–240.000 °C	450.000 °C
External pressure	0.000 bar	100.000 bar
Concentration	0%	100%
Baume	0	10
Specific gravity	0	10

6.2.3 Configure AO Cutoff

Display	Not available
ProLink III	**Device Tools** > **Configuration** > **I/O** > **Outputs** > **mA Output**
Field Communicator	• **Configure** > **Manual Setup** > **Inputs/Outputs** > **mA Output 1** > **mA Output Settings** > **MAO Cutoff** • **Configure** > **Manual Setup** > **Inputs/Outputs** > **mA Output 2** > **mA Output Settings** > **MAO Cutoff**

AO Cutoff (Analog Output Cutoff) specifies the lowest mass flow rate, volume flow rate, or gas standard volume flow rate that will be reported through the mA Output. Any flow rates below **AO Cutoff** will be reported as 0.

Restriction

AO Cutoff is applied only if **mA Output Process Variable** is set to Mass Flow Rate, Volume Flow Rate, or Gas Standard Volume Flow Rate. If **mA Output Process Variable** is set to a different process variable, **AO Cutoff** is not configurable, and the transmitter does not implement the AO cutoff function.

Procedure

Set **AO Cutoff** as desired.

The default values for **AO Cutoff** are as follows:

- Primary mA Output: 0.0 g/sec
- Secondary mA Output: Not-A-Number

Tip

For most applications, the default value of **AO Cutoff** should be used. Contact customer service before changing **AO Cutoff**.

Interaction between AO Cutoff and process variable cutoffs

When **mA Output Process Variable** is set to a flow variable (for example, mass flow rate or volume flow rate), **AO Cutoff** interacts with **Mass Flow Cutoff** or **Volume Flow Cutoff**. The transmitter puts the cutoff into effect at the highest flow rate at which a cutoff is applicable.

Example: Cutoff interaction

Configuration:

- **mA Output Process Variable** = Mass Flow Rate
- **Frequency Output Process Variable** = Mass Flow Rate
- **AO Cutoff** = 10 g/sec
- **Mass Flow Cutoff** = 15 g/sec

Result: If the mass flow rate drops below 15 g/sec, all outputs representing mass flow will report zero flow.

Example: Cutoff interaction

Configuration:

- **mA Output Process Variable** = Mass Flow Rate
- **Frequency Output Process Variable** = Mass Flow Rate
- **AO Cutoff** = 15 g/sec
- **Mass Flow Cutoff** = 10 g/sec

Result:

- If the mass flow rate drops below 15 g/sec but not below 10 g/sec:
  - The mA Output will report zero flow.
  - The Frequency Output will report the actual flow rate.
- If the mass flow rate drops below 10 g/sec, both outputs will report zero flow.

6.2.4 Configure Added Damping

Display	Not available
ProLink III	**Device Tools** > **Configuration** > **I/O** > **Outputs** > **mA Output**
Field Communicator	• **Configure** > **Manual Setup** > **Inputs/Outputs** > **mA Output 1** > **mA Output Settings** > **PV Added Damping** • **Configure** > **Manual Setup** > **Inputs/Outputs** > **mA Output 2** > **mA Output Settings** > **SV Added Damping**

Overview

Added Damping controls the amount of damping that will be applied to the mA Output.

Damping is used to smooth out small, rapid fluctuations in process measurement. **Damping Value** specifies the time period (in seconds) over which the transmitter will spread changes in the process variable. At the end of the interval, the internal value will reflect 63% of the change in the actual measured value.

Added Damping affects the reporting of **mA Output Process Variable** through the mA Output only. It does not affect the reporting of that process variable via any other method (e.g., a Frequency Output or digital communications), or the value of the process variable used in calculations.

Note

Added Damping is not applied if the mA Output is fixed (for example, during loop testing) or if the mA Output is reporting a fault. **Added Damping** is applied while sensor simulation is active.

Procedure

Set **Added Damping** to the desired value.

The default value is 0.0 seconds. The range is 0.0 to 440 seconds.

When you specify a value for **Added Damping**, the transmitter automatically rounds the value down to the nearest valid value.

Note

Added Damping values are affected by the setting of **Update Rate** and **100 Hz Variable**.

Table 6-7: Valid values for Added Damping

Setting of **Update Rate**	Process variable	Update rate in effect	Valid values for **Added Damping**
Normal	N/A	20 Hz	0.0, 0.1, 0.3, 0.75, 1.6, 3.3, 6.5, 13.5, 27.5, 55, 110, 220, 440
Special	100 Hz variable (if assigned to the mA Output)	100 Hz	0.0, 0.04, 0.12, 0.30, 0.64, 1.32, 2.6, 5.4, 11, 22, 44, 88, 176, 350
	100 Hz variable (if not assigned to the mA Output) All other process variables	6.25 Hz	0.0, 0.32, 0.96, 2.40, 5.12, 10.56, 20.8, 43.2, 88, 176, 352

Interaction between mA Output Damping and process variable damping

When **mA Output Source** is set to a flow rate variable, density, or temperature, **mA Output Damping** interacts with **Flow Damping**, **Density Damping**, or **Temperature Damping**. If multiple damping parameters are applicable, the effect of damping the process variable is calculated first, and the mA Output damping calculation is applied to the result of that calculation.

Example: Damping interaction

Configuration:

- **Flow Damping** = 1 second
- **mA Output Source** = Mass Flow Rate
- **mA Output Damping** = 2 seconds

Result: A change in the mass flow rate will be reflected in the mA Output over a time period that is greater than 3 seconds. The exact time period is calculated by the transmitter according to internal algorithms which are not configurable.

6.2.5 Configure mA Output Fault Action and mA Output Fault Level

Display	Not available
ProLink III	**Device Tools** > **Configuration** > **Fault Processing**
Field Communicator	• **Configure** > **Manual Setup** > **Inputs/Outputs** > **mA Output 1** > **MA01 Fault Settings** • **Configure** > **Manual Setup** > **Inputs/Outputs** > **mA Output 2** > **MA02 Fault Settings**

Overview

mA Output Fault Action controls the behavior of the mA Output if the transmitter encounters an internal fault condition.

Note

For some faults only: If **Fault Timeout** is set to a non-zero value, the transmitter will not implement the fault action until the timeout has elapsed.

Procedure

1. Set **mA Output Fault Action** to the desired value.

   The default setting is Downscale.

   Restriction

   If **Digital Communications Fault Action** is set to NAN (not a number), you cannot set **mA Output Fault Action** or **Frequency Output Fault Action** to None. If you try to do this, the transmitter will not accept the configuration.

2. If you set **mA Output Fault Action** to Upscale or Downscale, set **mA Output Fault Level** as desired.

Postrequisites

⚠ CAUTION!

If you set mA Output Fault Action or Frequency Output Fault Action to None**, be sure to set Digital Communications Fault Action to** None**. If you do not, the output will not report actual process data, and this may result in measurement errors or unintended consequences for your process.**

Options for mA Output Fault Action and mA Output Fault Level

Option	mA Output behavior	mA Output Fault Level
Upscale	Goes to the configured fault level	Default: 22.0 mA Range: 21.0 to 24.0 mA
Downscale (default)	Goes to the configured fault level	Default: 2.0 mA Range: 1.0 to 3.6 mA
Internal Zero	Goes to the mA Output level associated with a process variable value of 0 (zero), as determined by **Lower Range Value** and **Upper Range Value** settings	Not applicable
None	Tracks data for the assigned process variable; no fault action	Not applicable

6.3 Configure the Frequency Output

The Frequency Output is used to report a process variable. The Frequency Output parameters control how the process variable is reported. Your transmitter may have zero, one, or two Frequency Outputs, depending on the configuration of Channels B and C. If both Channels B and C are configured as Frequency Outputs, they are electrically isolated but not independent. You cannot configure them separately.

Important

Whenever you change a Frequency Output parameter, verify all other Frequency Output parameters before returning the flowmeter to service. In some situations, the transmitter automatically loads a set of stored values, and these values may not be appropriate for your application.

6.3.1 Configure Frequency Output Process Variable

Display	OFF-LINE MAINT > OFF-LINE CONFG > IO > CONFIG CH B > SET FO > FO SRC OFF-LINE MAINT > OFF-LINE CONFG > IO > CONFIG CH C > SET FO > FO SRC
ProLink III	Device Tools > Configuration > I/O > Outputs > Frequency Output
Field Communicator	Configure > Manual Setup > Inputs/Outputs > Frequency Output > FO Settings > Third Variable

Overview

Frequency Output Process Variable controls the variable that is reported over the frequency output.

Prerequisites

If you plan to configure the output to report volume flow, ensure that you have set **Volume Flow Type** as desired: Liquid or Gas Standard Volume.

If you plan to configure an output to report a concentration measurement process variable, ensure that the concentration measurement application is configured so that the desired variable is available.

If you are using the HART variables, be aware that changing the configuration of **Frequency Output Process Variable** will change the configuration of the HART Tertiary Variable (TV).

Procedure

Set **Frequency Output Process Variable** as desired.

The default setting is Mass Flow Rate.

Options for Frequency Output Process Variable

The transmitter provides a basic set of options for **Frequency Output Process Variable**, plus several application-specific options. Different communications tools may use different labels for the options.

Table 6-8: Standard FO process variables

Process variable	Label		
	Display	**ProLink III**	**Field Communicator**
Gas standard volume flow rate	GSV F	Gas Standard Volume Flow Rate	Gas vol flo
Mass flow rate	MFLOW	Mass Flow Rate	Mass flo
Volume flow rate	VFLOW	Volume Flow Rate	Vol flo

Table 6-9: Petroleum measurement FO process variables

Process variable	Label		
	Display	ProLink III	Field Communicator
Temperature-corrected (standard) volume flow rate	TCVOL	Volume Flow Rate at Reference Temperature	TC Vol

Table 6-10: Concentration measurement FO process variables

Process variable	Label		
	Display	ProLink III	Field Communicator
Net mass flow rate	NET M	Net Mass Flow Rate	ED Net Mass flo
Net volume flow rate	NET V	Net Volume Flow Rate	ED Net Vol flo
Standard volume flow rate	STD V	Volume Flow Rate at Reference Temperature	ED Std Vol flo

Table 6-11: Fuel consumption FO process variables

Process variable	Label		
	Display	ProLink III	Field Communicator
Differential mass flow	Differential Mass Flow Rate	Differential Mass Flow	Differential Mass Flow Rate

6.3.2 Configure Frequency Output Polarity

Display	OFF-LINE MAINT > OFF-LINE CONFG > IO > CONFIG CH B > SET FO > FO POLAR OFF-LINE MAINT > OFF-LINE CONFG > IO > CONFIG CH C > SET FO > FO POLAR
ProLink III	Device Tools > Configuration > I/O > Outputs > Frequency Output
Field Communicator	Configure > Manual Setup > Inputs/Outputs > Frequency Output > FO Settings > FO Polarity

Overview

Frequency Output Polarity controls how the output indicates the ON (active) state. The default value, Active High, is appropriate for most applications. Your receiving device might require an Active Low setting.

Procedure

Set **Frequency Output Polarity** as desired.

The default setting is Active High.

Options for Frequency Output Polarity

Polarity option		Reference voltage (OFF)	Pulse voltage (ON)
Active High	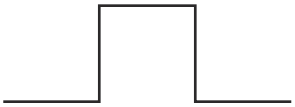	0	As determined by power supply, pull-up resistor, and load. See the installation manual for your transmitter.
Active Low	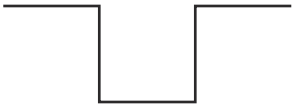	As determined by power supply, pull-up resistor, and load. See the installation manual for your transmitter.	0

6.3.3 Configure Frequency Output Scaling Method

Display	OFF-LINE MAINT > OFF-LINE CONFG > IO > CONFIG CH B > SET FO > FO SCALE OFF-LINE MAINT > OFF-LINE CONFG > IO > CONFIG CH C > SET FO > FO SCALE
ProLink III	Device Tools > Configuration > I/O > Outputs > Frequency Output
Field Communicator	Configure > Manual Setup > Inputs/Outputs > Frequency Output > FO Scaling

Overview

Frequency Output Scaling Method defines the relationship between output pulse and flow units. Set **Frequency Output Scaling Method** as required by your frequency receiving device.

Procedure

1. Set **Frequency Output Scaling Method**.

Option	Description
Frequency=Flow (default)	Frequency calculated from flow rate
Pulses/Unit	A user-specified number of pulses represents one flow unit
Units/Pulse	A pulse represents a user-specified number of flow units

2. Set additional required parameters.
   - If you set **Frequency Output Scaling Method** to Frequency=Flow, set **Rate Factor** and **Frequency Factor**.
   - If you set **Frequency Output Scaling Method** to Pulses/Unit, define the number of pulses that will represent one flow unit.
   - If you set **Frequency Output Scaling Method** to Units/Pulse, define the number of units that each pulse will indicate.

For all scaling methods, the transmitter puts out a fixed number of pulses per unit, and at the same time, the Frequency Output signal varies in proportion to flowrate.

Calculate frequency from flow rate

The Frequency=Flow option is used to customize the Frequency Output for your application when you do not know appropriate values for Units/Pulse or Pulses/Unit.

If you specify Frequency=Flow, you must provide values for **Rate Factor** and **Frequency Factor**:

Rate Factor The maximum flow rate that you want the Frequency Output to report.

Frequency Factor A value calculated as follows:

$$\text{FrequencyFactor} = \frac{\text{RateFactor}}{T} \times N$$

where:

T Factor to convert selected time base to seconds

N Number of pulses per flow unit, as configured in the receiving device

The resulting **Frequency Factor** must be within the range of the Frequency Output (0 to 10,000 Hz :

- If **Frequency Factor** is less than1 Hz, reconfigure the receiving device for a higher pulses/unit setting.
- If **Frequency Factor** is greater than 10,000 Hz, reconfigure the receiving device for a lower pulses/unit setting.

6.3.4 Configure Frequency Output Mode

Display	• **OFF-LINE MAINT** > **OFF-LINE CONFG** > **IO** > **CONFIG CH B** > **SET FO** > **FO MODE** • **OFF-LINE MAINT** > **OFF-LINE CONFG** > **IO** > **CONFIG CH C** > **SET FO** > **FO MODE**
ProLink III	**Device Tools** > **Configuration** > **I/O** > **Outputs** > **Frequency Output**
Field Communicator	Not available

Overview

Frequency Output Mode defines the relationship between the two Frequency Outputs (dual-pulse mode).

Prerequisites

Before configuring **Frequency Output Mode**, ensure that both Channel B and Channel C are configured to operate as Frequency Outputs. If you do not have two Frequency Outputs on your transmitter, **Frequency Output Mode** is set to Single and cannot be changed.

Procedure

Set **Frequency Output Mode** as desired.

The default value is Quadrature.

Options for Frequency Output Mode

Option	Channel behavior		Process condition
In-Phase 50% duty cycle	Channel B Channel C	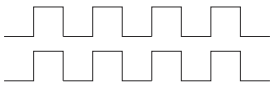	
90° Phase Shift 50% duty cycle	Channel B Channel C	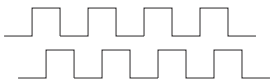	
–90° Phase Shift 50% duty cycle	Channel B Channel C	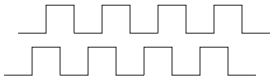	
180° Phase Shift 50% duty cycle	Channel B Channel C	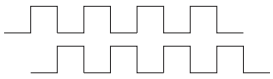	
Quadrature (1) 50% duty cycle	Channel B Channel C	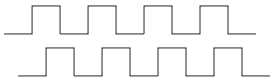	Forward flow Channel C lags Channel B by 90°
	Channel B Channel C	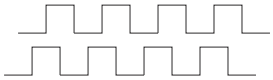	Reverse flow Channel C leads Channel B by 90°
	Channel B Channel C	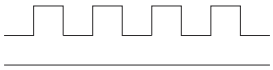	Fault condition Channel C is driven to 0

(1) Quadrature mode is used only for specific Weights & Measures applications where required by law.

6.3.5 Configure Frequency Output Fault Action and Frequency Output Fault Level

Display	Not available
ProLink III	**Device Tools** > **Configuration** > **Fault Processing**
Field Communicator	• **Configure** > **Manual Setup** > **Inputs/Outputs** > **Frequency Output** > **FO Fault Parameters** > **FO Fault Action** • **Configure** > **Manual Setup** > **Inputs/Outputs** > **Frequency Output** > **FO Fault Parameters** > **FO Fault Level**

Overview

Frequency Output Fault Action controls the behavior of the Frequency Output if the transmitter encounters an internal fault condition.

Note

For some faults only: If **Fault Timeout** is set to a non-zero value, the transmitter will not implement the fault action until the timeout has elapsed.

Procedure

1. Set **Frequency Output Fault Action** as desired.

   The default value is Downscale (0 Hz).

2. If you set **Frequency Output Fault Action** to Upscale, set **Frequency Fault Level** to the desired value.

   The default value is 15000 Hz. The range is 10 to 15000 Hz.

Options for Frequency Output Fault Action

Table 6-12: Options for Frequency Output Fault Action

Label	Frequency output behavior	
	All modes except Quadrature	**Quadrature mode**
Upscale	Goes to configured Upscale value: • Range: 10 Hz to 15000 Hz • Default: 15000 Hz	Channel B: Goes to configured Upscale value Channel C: 0 Hz
Downscale	0 Hz	Channel B: goes to configured Upscale value Channel C: 0 Hz
Internal Zero	0 Hz	Channel B: Goes to configured Upscale value Channel C: 0 Hz
None (default)	Tracks data for the assigned process variable; no fault action	Channel B: Tracks data for the assigned process variable Channel C: Tracks data for the assigned process variable

If your transmitter has two Frequency Outputs, their fault behavior is the same for all modes except Quadrature.

⚠ CAUTION!

If you set mA Output Fault Action or Frequency Output Fault Action to None, be sure to set Digital Communications Fault Action to None. If you do not, the output will not report actual process data, and this may result in measurement errors or unintended consequences for your process.

Restriction

If **Digital Communications Fault Action** is set to NAN (not a number), you cannot set **mA Output Fault Action** or **Frequency Output Fault Action** to None. If you try to do this, the transmitter will not accept the configuration.

6.4 Configure the Discrete Output

The Discrete Output is used to report specific meter or process conditions. The Discrete Output parameters control which condition is reported and how it is reported. Your transmitter may have zero, one, or two Discrete Outputs, depending on the configuration of Channels B and C. If both Channels B and C are configured as Discrete Output, they operate independently and you can configure them separately.

Restriction

Before you can configure the Discrete Output, you must configure a channel to operate as a Discrete Output.

Important

Whenever you change a Discrete Output parameter, verify all other Discrete Output parameters before returning the meter to service. In some situations, the transmitter automatically loads a set of stored values, and these values may not be appropriate for your application.

6.4.1 Configure Discrete Output Source

Display	• **OFF-LINE MAINT** > **OFF-LINE CONFG** > **IO** > **CONFIG CH B** > **SET DO** > **DO 1 SRC** • **OFF-LINE MAINT** > **OFF-LINE CONFG** > **IO** > **CONFIG CH C** > **SET DO** > **DO 2 SRC**
ProLink III	**Device Tools** > **Configuration** > **I/O** > **Outputs** > **Discrete Output**
Field Communicator	• **Configure** > **Manual Setup** > **Inputs/Outputs** > **Discrete Output** > **DO 1 Assignment** • **Configure** > **Manual Setup** > **Inputs/Outputs** > **Discrete Output** > **DO 2 Assignment**

Overview

Discrete Output Source controls which device condition or process condition is reported via the Discrete Output.

Procedure

Set **Discrete Output Source** to the desired option.

Default settings for **Discrete Output Source** are as follows:

- Discrete Output 1: Flow Direction
- Discrete Output 2: Flow Switch, with **Flow Switch Variable** set to Mass Flow Rate, **Flow Switch Setpoint** set to 0.0 g/s, and **Flow Switch Hysteresis** set to 0.05 (5%).

Options for Discrete Output Source

Option	Label			State	Discrete Output voltage
	Display	ProLink III	Field Communicator		
Discrete Event 1–5 (1)	D EV x	Enhanced Event 1 Enhanced Event 2 Enhanced Event 3 Enhanced Event 4 Enhanced Event 5	Discrete Event x	ON	Site-specific
				OFF	0 V
Event 1–2 (2)	EVNT1 EVNT2 E1OR2	Event 1 Event 2 Event 1 or Event 2 Status	Event 1 Event 2 Event 1 or Event 2	ON	Site-specific
				OFF	0 V
Flow Switch	FL SW	Flow Switch Indicator	Flow Switch	ON	Site-specific
				OFF	0 V
Flow Direction	FLDIR	Forward Reverse Indicator	Forward/Reverse	Forward flow	0 V
				Reverse flow	Site-specific
Calibration in Progress	ZERO	Calibration in Progress	Calibration in Progress	ON	Site-specific
				OFF	0 V
Fault	FAULT	Fault Indication	Fault	ON	Site-specific
				OFF	0 V

(1) Events configured using the enhanced event model.
(2) Events configured using the basic event model.

Important

If you assign Flow Switch to the Discrete Output, you should also configure **Flow Switch Variable**, **Flow Switch Setpoint**, and **Hysteresis**.

Note

If your transmitter has two Discrete Outputs:

- You can configure them independently. For example, you can assign one to Flow Switch and one to Fault.
- If you assign both to Flow Switch, the same settings for **Flow Switch Variable**, **Flow Switch Setpoint**, and **Flow Switch Hysteresis** will be implemented for both Discrete Outputs.

Related information

Configure an enhanced event
Fault indication with the Discrete Output

Configure Flow Switch parameters

Display	• OFF-LINE MAINT > OFF-LINE CONFG > IO > CONFIG CH B > SET DO > CONFIG FL SW • OFF-LINE MAINT > OFF-LINE CONFG > IO > CONFIG CH C > SET DO > CONFIG FL SW
ProLink III	Device Tools > Configuration > I/O > Outputs > Discrete Output
Field Communicator	• Configure > Manual Setup > Inputs/Outputs > Discrete Output > Flow Switch Source • Configure > Manual Setup > Inputs/Outputs > Discrete Output > Flow Switch Set-point • Configure > Manual Setup > Inputs/Outputs > Discrete Output > Hysteresis

Overview

Flow Switch is used to indicate that the flow rate (measured by the configured flow variable) has moved past the configured setpoint, in either direction. The flow switch is implemented with a user-configurable hysteresis.

Procedure

1. Set **Discrete Output Source** to Flow Switch, if you have not already done so.
2. Set **Flow Switch Variable** to the flow variable that you want to use to control the flow switch.
3. Set **Flow Switch Setpoint** to the value at which the flow switch will be triggered (after **Hysteresis** is applied).
   - If the flow rate is below this value, the Discrete Output is ON.
   - If the flow rate is above this value, the Discrete Output is OFF.
4. Set **Hysteresis** to the percentage of variation above and below the setpoint that will operate as a deadband.

   Hysteresis defines a range around the setpoint within which the flow switch will not change. The default is 5%. The valid range is 0.1% to 10%.

   Example: If **Flow Switch Setpoint** = 100 g/sec and **Hysteresis** = 5%, and the first measured flow rate is above 100 g/sec, the Discrete Output is OFF. It will remain OFF unless the flow rate drops below 95 g/sec. If this happens, the Discrete Output will turn ON, and remain ON until the flow rate rises above 105 g/sec. At this point it turns OFF and will remain OFF until the flow rate drops below 95 g/sec.

6.4.2 Configure Discrete Output Polarity

Display	• OFF-LINE MAINT > OFF-LINE CONFG > IO > CONFIG CH B > SET DO > DO 1 POLAR • OFF-LINE MAINT > OFF-LINE CONFG > IO > CONFIG CH C > SET DO > DO 2 POLAR
ProLink III	Device Tools > Configuration > I/O > Outputs > Discrete Output
Field Communicator	• Configure > Manual Setup > Inputs/Outputs > Discrete Output > DO 1 Polarity • Configure > Manual Setup > Inputs/Outputs > Discrete Output > DO 2 Polarity

Overview

Discrete Outputs have two states: ON (active) and OFF (inactive). Two different voltage levels are used to represent these states. **Discrete Output Polarity** controls which voltage level represents which state.

Procedure

Set **Discrete Output Polarity** as desired.

The default setting is Active High.

Options for Discrete Output Polarity

Polarity option		Discrete output power supply	Description
Active High	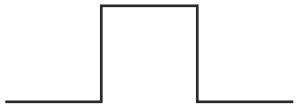	Internal	• When asserted (condition tied to DO is true), the circuit provides a pull-up to 15 V. • When not asserted (condition tied to DO is false), the circuit provides 0 V.
		External	• When asserted (condition tied to DO is true), the circuit provides a pull-up to a site-specific voltage, maximum 30 V. • When not asserted (condition tied to DO is false), the circuit provides 0 V.
Active Low	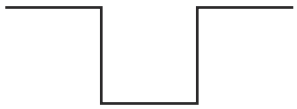	Internal	• When asserted (condition tied to DO is true), the circuit provides 0 V. • When not asserted (condition tied to DO is false), the circuit provides a pull-up to 15 V.
		External	• When asserted (condition tied to DO is true), the circuit provides 0 V. • When not asserted (condition tied to DO is false), the circuit provides a pull-up to a site-specific voltage, to a maximum of 30 V.

6.4.3 Configure Discrete Output Fault Action

Display	Not available
ProLink III	**Device Tools** > **Configuration** > **Fault Processing**
Field Communicator	• **Configure** > **Manual Setup** > **Inputs/Outputs** > **Discrete Output** > **DO 1 Fault Action** • **Configure** > **Manual Setup** > **Inputs/Outputs** > **Discrete Output** > **DO 2 Fault Action**

Overview

Discrete Output Fault Action controls the behavior of the Discrete Output if the transmitter encounters an internal fault condition.

Note

For some faults only: If **Fault Timeout** is set to a non-zero value, the transmitter will not implement the fault action until the timeout has elapsed.

⚠ CAUTION!

Do not use Discrete Output Fault Action as a fault indicator. If you do, you may not be able to distinguish a fault condition from a normal operating condition. If you want to use the Discrete Output as a fault indicator, set Discrete Output Source to Fault **and set Discrete Output Fault Action to** None**.**

Procedure

Set **Discrete Output Fault Action** as desired.

The default setting is None.

Related information

Fault indication with the Discrete Output

Options for Discrete Output Fault Action

Label	Discrete Output behavior
Upscale	• Fault: Discrete Output is ON (site-specific voltage) • No fault: Discrete Output is controlled by its assignment
Downscale	• Fault: Discrete Output is OFF (0 V) • No fault: Discrete Output is controlled by its assignment
None (default)	Discrete Output is controlled by its assignment

Fault indication with the Discrete Output

To indicate faults via the Discrete Output, set **Discrete Output Source** to Fault. Then, if a fault occurs, the Discrete Output is always ON and the setting of **Discrete Output Fault Action** is ignored.

6.5 Configure the Discrete Input

The Discrete Input is used to initiate one or more transmitter actions from a remote input device. Your transmitter may have zero or one Discrete Input, depending on the configuration of Channel C.

The Discrete Input parameters include:

- **Discrete Input Action**
- **Discrete Input Polarity**

Important

Whenever you change a Discrete Input parameter, verify all other Discrete Input parameters before returning the flowmeter to service. In some situations, the transmitter automatically loads a set of stored values, and these values may not be appropriate for your application.

6.5.1 Configure Discrete Input Action

Display	**OFF-LINE MAINT** > **OFF-LINE CONFG** > **IO** > **CONFIG CH C** > **SET DI** > **DI ACT**
ProLink III	**Device Tools** > **Configuration** > **I/O** > **Action Assignment**
Field Communicator	**Configure** > **Manual Setup** > **Inputs/Outputs** > **Discrete Input** > **DI Assignment**

Overview

Discrete Input Action controls the action or actions that the transmitter will perform when the Discrete Input transitions from OFF to ON.

Important

Before assigning actions to an enhanced event or Discrete Input, check the status of the event or the remote input device. If it is ON, all assigned actions will be performed when the new configuration is implemented. If this is not acceptable, wait until an appropriate time to assign actions to the event or Discrete Input.

Procedure

1. Select an action.
2. Select the Discrete Input that will perform the selected action.
3. Repeat until you have assigned all the actions to be performed by the Discrete Input.

Options for Discrete Input Action

Action	Label		
	Display	**ProLink III**	**Field Communicator**
Standard			
None (default)	NONE	None	None
Start sensor zero	START ZERO	Start Sensor Zero	Perform auto zero
Start/stop all totalizers	START STOP	Start/Stop All Totalization	Start/stop totals
Reset mass total	RESET MASS	Reset Mass Total	Reset mass total
Reset volume total	RESET VOL	Reset Volume Total	Reset volume total
Reset gas standard volume total	RESET GSVT	Reset Gas Std Volume Total	Reset gas standard volume total
Reset all totals	RESET ALL	Reset All Totals	Reset totals
Petroleum measurement			
Reset temperature-corrected volume total	TCVOL	Reset Volume Total at Reference Temperature	Reset corrected volume total
Concentration measurement			
Reset CM reference volume total	RESET STD V	Reset Volume Total at Reference Temperature	Not available
Reset CM net mass total	RESET NET M	Reset Net Mass Total	Not available
Reset CM net volume total	RESET NET V	Reset Net Volume Total	Not available
Increment CM matrix	INCr CURVE	Increment Concentration Matrix	Not available
Meter verification			
Start meter verification test	START VERFY	Start Meter Verification	Not available

Important

Before assigning actions to an enhanced event or Discrete Input, check the status of the event or the remote input device. If it is ON, all assigned actions will be performed when the new configuration is implemented. If this is not acceptable, wait until an appropriate time to assign actions to the event or Discrete Input.

6.5.2 Configure Discrete Input Polarity

Display	**OFF-LINE MAINT** > **OFF-LINE CONFG** > **IO** > **CONFIG CH C** > **SET DI** > **DI POLAR**
ProLink III	**Device Tools** > **Configuration** > **I/O** > **Inputs** > **Discrete Input**
Field Communicator	**Configure** > **Manual Setup** > **Inputs/Outputs** > **Discrete Input** > **DI Polarity**

Overview

The Discrete Input has two states: ON and OFF. **Discrete Input Polarity** controls how the transmitter maps the incoming voltage level to the ON and OFF states.

Procedure

Set **Discrete Input Polarity** as desired.

The default setting is Active Low.

Options for Discrete Input Polarity

Polarity option		Discrete Input power supply	Voltage	Status of discrete input at transmitter
Active High	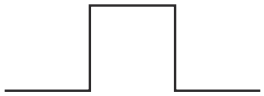	Internal	Voltage across terminals is high	ON
			Voltage across terminals is 0 VDC	OFF
		External	Voltage applied across terminals is 3–30 VDC	ON
			Voltage applied across terminals is <0.8 VDC	OFF
Active Low	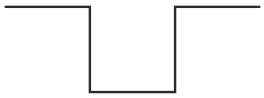	Internal	Voltage across terminals is 0 VDC	ON
			Voltage across terminals is high	OFF
		External	Voltage applied across terminals is <0.8 VDC	ON
			Voltage applied across terminals is 3–30 VDC	OFF

6.6 Configure events

An event occurs when the real-time value of a user-specified process variable moves past a user-defined setpoint. Events are used to provide notification of process changes or to perform specific transmitter actions if a process change occurs.

Your transmitter supports two event models:

- Basic event model
- Enhanced event model

6.6.1 Configure a basic event

Display	Not available
ProLink III	**Device Tools** > **Configuration** > **Events** > **Basic Events**
Field Communicator	Not available

Overview

A basic event is used to provide notification of process changes. A basic event occurs (is ON) if the real-time value of a user-specified process variable moves above (HI) or below (LO) a user-defined setpoint. You can define up to two basic events. Event status can be queried via digital communications, and a Discrete Output can be configured to report event status.

Procedure

1. Select the event that you want to configure.
2. Specify **Event Type**.

Option	Description
HI	$x > A$ The event occurs when the value of the assigned process variable (x) is greater than the setpoint (**Setpoint A**), endpoint not included.
LO	$x < A$ The event occurs when the value of the assigned process variable (x) is less than the setpoint (**Setpoint A**), endpoint not included.

3. Assign a process variable to the event.
4. Set a value for **Setpoint A**.
5. (Optional) Configure a Discrete Output to switch states in response to the event status.

6.6.2 Configure an enhanced event

Display	Not available
ProLink III	**Device Tools** > **Configuration** > **Events** > **Enhanced Events**
Field Communicator	**Configure** > **Alert Setup** > **Discrete Events**

Overview

An enhanced event is used to provide notification of process changes and, optionally, to perform specific transmitter actions if the event occurs. An enhanced event occurs (is ON) if the real-time value of a user-specified process variable moves above (HI) or below (LO) a user-defined setpoint, or in range (IN) or out of range (OUT) with respect to two user-defined setpoints. You can define up to five enhanced events.

Procedure

1. Select the event that you want to configure.
2. Specify **Event Type**.

Option	Description
HI	$x > A$ The event occurs when the value of the assigned process variable (x) is greater than the setpoint (**Setpoint A**), endpoint not included.
LO	$x < A$ The event occurs when the value of the assigned process variable (x) is less than the setpoint (**Setpoint A**), endpoint not included.
IN	$A \leq x \leq B$ The event occurs when the value of the assigned process variable (x) is *in range*, that is, between **Setpoint A** and **Setpoint B**, endpoints included.
OUT	$x \leq A$ or $x \geq B$ The event occurs when the value of the assigned process variable (x) is *out of range*, that is, less than **Setpoint A** or greater than **Setpoint B**, endpoints included.

3. Assign a process variable to the event.
4. Set values for the required setpoints.
   - For HI and LO events, set **Setpoint A**.
   - For IN and OUT events, set **Setpoint A** and **Setpoint B**.
5. (Optional) Configure a Discrete Output to switch states in response to the event status.
6. (Optional) Specify the action or actions that the transmitter will perform when the event occurs.
   - With the display: **OFF-LINE MAINT** > **OFF-LINE CONFG** > **IO** > **CH C** > **SET DI** > **DI ACT**
   - With ProLink III: **Device Tools** > **Configuration** > **I/O** > **Action Assignment**
   - With the Field Communicator: **Configure** > **Alert Setup** > **Discrete Events** > **Assign Discrete Action**

Options for Enhanced Event Action

Action	Label		
	Display	ProLink III	Field Communicator
Standard			
None (default)	NONE	None	None
Start sensor zero	START ZERO	Start Sensor Zero	Perform auto zero
Start/stop all totalizers	START STOP	Start/Stop All Totalization	Start/stop totals
Reset mass total	RESET MASS	Reset Mass Total	Reset mass total
Reset volume total	RESET VOL	Reset Volume Total	Reset volume total
Reset gas standard volume total	RESET GSVT	Reset Gas Std Volume Total	Reset gas standard volume total
Reset all totals	RESET ALL	Reset All Totals	Reset totals
Petroleum measurement			
Reset temperature-corrected volume total	TCVOL	Reset Volume Total at Reference Temperature	Reset corrected volume total
Concentration measurement			
Reset CM reference volume total	RESET STD V	Reset Volume Total at Reference Temperature	Not available
Reset CM net mass total	RESET NET M	Reset Net Mass Total	Not available
Reset CM net volume total	RESET NET V	Reset Net Volume Total	Not available
Increment CM matrix	INCr CURVE	Increment Concentration Matrix	Not available
Meter verification			
Start meter verification test	START VERFY	Start Meter Verification	Not available

Important

Before assigning actions to an enhanced event or Discrete Input, check the status of the event or the remote input device. If it is ON, all assigned actions will be performed when the new configuration is implemented. If this is not acceptable, wait until an appropriate time to assign actions to the event or Discrete Input.

6.7 Configure digital communications

The digital communications parameters control how the transmitter will communicate using digital communications.

Your transmitter supports the following types of digital communications:

- HART/Bell 202 over the primary mA terminals
- Modbus RTU via the service port

Note

The service port responds automatically to a wide range of connection requests. It is not configurable.

6.7.1 Configure HART/Bell 202 communications

HART/Bell 202 communications parameters support HART communications with the transmitter's primary mA terminals over a HART/Bell 202 network.

Configure basic HART parameters

Basic HART parameters include the HART address, HART tags, and the operation of the primary mA Output.

HART/Bell 202 communications parameters support HART communication with the transmitter's primary mA terminals over a HART/Bell 202 network. The HART/Bell 202 communications parameters include:

- HART Address (Polling Address)
- mA Output Action
- Burst Parameters (optional)
- HART Variables (optional)

Procedure

1. Set **HART Address** to a value that is unique on your network.
   - Default: 0
   - Range: 0 to 15

   Tips

   - The default address is typically used unless you are in a multidrop environment.
   - Devices using HART protocol to communicate with the transmitter may use either **HART Address** or **HART Tag (Software Tag)** to identify the transmitter. Configure either or both, as required by your other HART devices.

2. Ensure that **mA Output Action** is configured appropriately.

Option	Description
Enabled (Live)	The primary mA Output reports process data as configured.
Disabled (Fixed)	The primary mA Output is fixed at 4 mA and does not report process data.

Important

If you use ProLink III to set **HART Address** to 0, the program automatically enables **mA Output Action**. If you use ProLink III to set **HART Address** to any other value, the program automatically disables **mA Output Action**. This is designed to make it easier to configure the transmitter for legacy behavior. Always verify **mA Output Action** after setting **HART Address**.

Configure burst parameters

Display	Not available
ProLink III	**Device Tools** > **Configuration** > **Communications** > **Communications (HART)**
Field Communicator	**Configure** > **Manual Setup** > **Inputs/Outputs** > **Communications** > **Set Up Burst Mode**

Overview

Burst mode is a mode of communication during which the transmitter regularly broadcasts HART digital information over the primary mA Output. The burst parameters control the information that is broadcast when burst mode is enabled.

Tip

In typical installations, burst mode is disabled. Enable burst mode only if you are using a HART Triloop.

Procedure

1. Enable **Burst Mode**.
2. Set **Burst Mode Output** as desired.

Label		Description
ProLink III	**Field Communicator**	
Source (Primary Variable)	PV	The transmitter sends the primary variable (PV) in the configured measurement units in each burst (e.g., 14.0 g/sec, 13.5 g/sec, 12.0 g/sec.
Primary Variable (Percent Range/Current)	% range/current	The transmitter sends the PV's percent of range and the PV's actual mA level in each burst (e.g., 25%, 11.0 mA.
Process Variables/Current	Process variables/current	The transmitter sends PV, SV, TV, and QV values in measurement units and the PV's actual milliamp reading in each burst (e.g., 50 g/sec, 23 °C, 50 g/sec, 0.0023 g/cm3, 11.8 mA.
Transmitter variables	Fld dev var	The transmitter sends four user-specified process variables in each burst.

3. Ensure that the burst output variables are set appropriately.

- If you set **Burst Mode Output** to send four user-specified variables, set the four process variables to be sent in each burst.
- If you set **Burst Mode Output** to any other option, ensure that the HART variables are set as desired.

Configure HART variables (PV, SV, TV, QV)

Display	Not available
ProLink III	**Device Tools** > **Configuration** > **Communications** > **Communications (HART)**
Field Communicator	**Configure** > **Manual Setup** > **Inputs/Outputs** > **Variable Mapping**

Overview

The HART variables are a set of four variables predefined for HART use. The HART variables include the Primary Variable (PV), Secondary Variable (SV), Tertiary Variable (TV), and Quaternary Variable (QV). You can assign specific process variables to the HART variables, and then use standard HART methods to read or broadcast the assigned process data.

Tip

The Tertiary Variable and Quaternary Variable are also called the Third Variable (TV) and Fourth Variable (FV).

Options for HART variables

Table 6-13: Standard HART process variables

Process variable	Primary Variable (PV)	Secondary Variable (SV)	Third Variable (TV)	Fourth Variable (QV)
Board Temperature				✓
Density	✓	✓		✓
Drive Gain	✓	✓		✓
External Pressure	✓	✓		✓
External Temperature	✓	✓		✓
Gas Standard Volume Flow Rate	✓	✓	✓	✓
Gas Standard Volume Inventory				✓
Gas Standard Volume Total				✓
Line (Gross) Volume Flow Rate	✓	✓	✓	✓
Line (Gross) Volume Inventory				✓
Line (Gross) Volume Total				✓
Live Zero				✓
LPO Amplitude				✓
Mass Flow Rate	✓	✓	✓	✓

Table 6-13: Standard HART process variables *(continued)*

Process variable	Primary Variable (PV)	Secondary Variable (SV)	Third Variable (TV)	Fourth Variable (QV)
Mass Inventory				✓
Mass Total				✓
Meter Temperature (T-Series)				✓
RPO Amplitude				✓
Temperature	✓	✓		✓
Tube Frequency				✓

Table 6-14: Petroleum measurement HART process variables

Process variable	Primary Variable (PV)	Secondary Variable (SV)	Third Variable (TV)	Fourth Variable (QV)
API Average Density	✓	✓		✓
API Average Temperature	✓	✓		✓
API Corrected Volume Flow	✓	✓	✓	✓
API Corrected Volume Inventory				✓
API Corrected Volume Total				✓
API CTL				✓
API Density At Reference	✓	✓		✓

Table 6-15: Concentration measurement HART process variables

Process variable	Primary Variable (PV)	Secondary Variable (SV)	Third Variable (TV)	Fourth Variable (QV)
CM Baume (700 core processor only)	✓	✓		✓
CM Concentration	✓	✓		✓
CM Density at Reference	✓	✓		✓
CM Net Mass Flow	✓	✓	✓	✓
CM Net Mass Inventory				✓
CM Net Mass Total				✓
CM Net Volume Flow	✓	✓	✓	✓
CM Net Volume Inventory				✓
CM Net Volume Total				✓
CM Specific Gravity	✓	✓		✓
CM Standard Volume Flow	✓	✓	✓	✓
CM Standard Volume Inventory				✓

Table 6-15: Concentration measurement HART process variables *(continued)*

Process variable	Primary Variable (PV)	Secondary Variable (SV)	Third Variable (TV)	Fourth Variable (QV)
CM Standard Volume Total				✓

Table 6-16: Fuel consumption HART process variables

Process variable	Primary Variable (PV)	Secondary Variable (SV)	Third Variable (TV)	Fourth Variable (QV)
Differential mass flow	✓	✓	✓	✓
Differential mass inventory				✓
Differential mass total				✓

Table 6-17: PVR-only HART process variables

Process variable	Primary Variable (PV)	Secondary Variable (SV)	Third Variable (TV)	Fourth Variable (QV)
Corrected Oil Flow	✓	✓		✓
Corrected Oil Total				✓
Corrected Water Cut	✓	✓		✓
Corrected Water Flow	✓	✓		✓
Corrected Water Total				✓
Density of Oil @ Line Fixd degAPI				✓
Density of Oil @ Line Fixd SGU				✓
Oil Total @ Line				✓
Shrinkage Factor Corrected Oil Flow @ 60F	✓	✓		✓
Shrinkage Factor Corrected Oil Flow @ Line	✓	✓		✓
Shrinkage Factor Corrected Oil Total @ 60F				✓
Shrinkage Factor Corrected Oil Total @ Line				✓
Shrinkage Factor Corrected Total of Mix @ 60F				✓
Shrinkage Factor Corrected Volume Of Mix @ 60F	✓	✓		✓
Uncorrected Oil Flow	✓	✓		✓
Uncorrected Water Cut	✓	✓		✓
Uncorrected Water Flow	✓	✓		✓
Volume Flow of Mix at Line	✓	✓		✓
Volume Total Of Mix @ Line				✓
Water Total @ Line				✓

Table 6-18: TMR-only HART process variables

Process variable	Primary Variable (PV)	Secondary Variable (SV)	Third Variable (TV)	Fourth Variable (QV)
Remediated Mass Flow	✓	✓		✓
Remediated Mass Total				✓
Remediated Mass Inventory				✓

Table 6-19: PVR- and TBR-only HART process variables

Process variable	Primary Variable (PV)	Secondary Variable (SV)	Third Variable (TV)	Fourth Variable (QV)
Unremediated Density	✓	✓		✓

Table 6-20: PVR, TBR, and TMR HART process variables

Process variable	Primary Variable (PV)	Secondary Variable (SV)	Third Variable (TV)	Fourth Variable (QV)
Total Remediated Time				✓

Interaction of HART variables and transmitter outputs

The HART variables are automatically reported through specific transmitter outputs. They may also be reported through HART burst mode, if enabled on your transmitter.

Table 6-21: HART variables and transmitter outputs

HART variable	Reported via	Comments
Primary Variable (PV)	Primary mA output	If one assignment is changed, the other is changed automatically, and vice versa.
Secondary Variable (SV)	Secondary mA Output (if present on your transmitter)	If one assignment is changed, the other is changed automatically, and vice versa. If your transmitter is not configured for a secondary mA Output, the SV must be configured directly, and the value of the SV is available only via digital communications.
Tertiary Variable (TV)	Frequency Output (if present on your transmitter)	If one assignment is changed, the other is changed automatically, and vice versa. If your transmitter does not have a Frequency Output, the TV must be configured directly, and the value of the TV is available only via digital communications.
Quaternary Variable (QV)	Not associated with an output	The QV must be configured directly, and the value of the QV is available only via digital communications.

6.7.2 Configure Digital Communications Fault Action

Display	Not available
ProLink III	**Device Tools** > **Configuration** > **Fault Processing**
Field Communicator	**Configure** > **Alert Setup** > **I/O Fault Actions** > **Comm Fault Action**

Overview

Digital Communications Fault Actionspecifies the values that will be reported via digital communications if the device encounters an internal fault condition.

Procedure

Set **Digital Communications Fault Action** as desired.

The default setting is None.

Restrictions

- If **mA Output Fault Action** or **Frequency Output Fault Action** is set to None, **Digital Communications Fault Action** should also be set to None. If you do not, the output will not report actual process data, and this may result in measurement errors or unintended consequences for your process.
- If you set **Digital Communications Fault Action** to NAN, you cannot set **mA Output Fault Action** or **Frequency Output Fault Action** to None. If you try to do this, the transmitter will not accept the configuration.

Options for Digital Communications Fault Action

Label		Description
ProLink III	**Field Communicator**	
Upscale	Upscale	• Process variable values indicate that the value is greater than the upper sensor limit. • Totalizers stop incrementing.
Downscale	Downscale	• Process variable values indicate that the value is lower than the lower sensor limit. • Totalizers stop incrementing.
Zero	IntZero-All 0	• Flow rate variables go to the value that represents a flow rate of 0 (zero). • Density is reported as `0`. • Temperature is reported as `0 °C`, or the equivalent if other units are used (e.g., `32 °F`. • Drive gain is reported as measured. • Totalizers stop incrementing.

Label		Description
ProLink III	**Field Communicator**	
Not a Number	Not-a-Number	• Process variables are reported as `IEEE NAN`. • Drive gain is reported as measured. • Modbus scaled integers are reported as `Max Int`. • Totalizers stop incrementing.
Flow to Zero	IntZero-Flow 0	• Flow rates are reported as `0`. • Other process variables are reported as measured. • Totalizers stop incrementing.
None	None (default)	• All process variables are reported as measured. • Totalizers increment if they are running.

⚠ CAUTION!

If you set mA Output Fault Action or Frequency Output Fault Action to None, be sure to set Digital Communications Fault Action to None. If you do not, the output will not report actual process data, and this may result in measurement errors or unintended consequences for your process.

Restriction

If **Digital Communications Fault Action** is set to NAN (not a number), you cannot set **mA Output Fault Action** or **Frequency Output Fault Action** to None. If you try to do this, the transmitter will not accept the configuration.

7 Complete the configuration

Topics covered in this chapter:

- *Test or tune the system using sensor simulation*
- *Back up transmitter configuration*
- *Enable write-protection on the transmitter configuration*

7.1 Test or tune the system using sensor simulation

Use sensor simulation to test the system's response to a variety of process conditions, including boundary conditions, problem conditions, or alert conditions, or to tune the loop.

Restriction

Sensor simulation is available only on flowmeters with the enhanced core processor.

Prerequisites

Before enabling sensor simulation, ensure that your process can tolerate the effects of the simulated process values.

Procedure

1. Navigate to the sensor simulation menu.

Communications tool	Menu path
Display	Not available
ProLink III	**Device Tools** > **Diagnostics** > **Testing** > **Sensor Simulation**
Field Communicator	**Service Tools** > **Simulate** > **Simulate Sensor**

2. Enable sensor simulation.
3. For mass flow, set **Wave Form** as desired and enter the required values.

Option	Required values
Fixed	Fixed Value
Sawtooth	Period Minimum Maximum

Option	Required values
Sine	Period Minimum Maximum

4. For density, set **Wave Form** as desired and enter the required values.

Option	Required values
Fixed	Fixed Value
Sawtooth	Period Minimum Maximum
Sine	Period Minimum Maximum

5. For temperature, set **Wave Form** as desired and enter the required values.

Option	Required values
Fixed	Fixed Value
Sawtooth	Period Minimum Maximum
Sine	Period Minimum Maximum

6. Observe the system response to the simulated values and make any appropriate changes to the transmitter configuration or to the system.
7. Modify the simulated values and repeat.
8. When you have finished testing or tuning, disable sensor simulation.

7.1.1 Sensor simulation

Sensor simulation allows you to test the system or tune the loop without having to create the test conditions in your process. When sensor simulation is enabled, the transmitter reports the simulated values for mass flow, density, and temperature, and takes all appropriate actions. For example, the transmitter might apply a cutoff, activate an event, or post an alert.

When sensor simulation is enabled, the simulated values are stored in the same memory locations used for process data from the sensor. The simulated values are then used throughout transmitter functioning. For example, sensor simulation will affect:

- All mass flow rate, temperature, and density values displayed or reported via outputs or digital communications
- The mass total and mass inventory values
- All volume calculations and data, including reported values, volume totals, and volume inventories
- All mass, temperature, density, or volume values logged to Data Logger

Sensor simulation does not affect any diagnostic values.

Unlike actual mass flow rate and density values, the simulated values are not temperature-compensated (adjusted for the effect of temperature on the sensor's flow tubes).

7.2 Back up transmitter configuration

ProLink III provides a configuration upload/download function which allows you to save configuration sets to your PC. This allows you to back up and restore your transmitter configuration. This is also a convenient way to replicate a configuration across multiple devices.

Restriction

This function is not available with any other communications tools.

Procedure

To back up the transmitter configuration using ProLink III:

1. Choose **Device Tools** > **Configuration Transfer** > **Save or Load Configuration Data**.
2. In the Configuration groupbox, select the configuration data you want to save.
3. Click **Save**, then specify a file name and location on your computer.
4. Click **Start Save**.

The backup file is saved to the specified name and location. It is saved as a text file and can be read using any text editor.

7.3 Enable write-protection on the transmitter configuration

Display	**OFF-LINE MAINT** > **CONFIG** > **LOCK**
ProLink III	**Device Tools** > **Configuration** > **Write-Protection**
Field Communicator	**Configure** > **Manual Setup** > **Info Parameters** > **Transmitter Info** > **Write Protect**

Overview

If the transmitter is write-protected, the configuration is locked and nobody can change it until it is unlocked. This prevents accidental or unauthorized changes to the transmitter configuration parameters.

8 Set up the Weights & Measures application

Topics covered in this chapter:

- *Weights & Measures application*
- *Set up the Weights & Measures application using ProLink III*

Information in this chapter is applicable only if your transmitter was ordered with the Weights & Measures application.

8.1 Weights & Measures application

The Weights & Measures application is used to provide process data that is legal for custody transfer applications when an approved method is used to read or obtain the measurement.

Regulatory agencies

When installed, configured, and used as recommended by Micro Motion, the Weights & Measures application is certified by the following regulatory agencies:

- NTEP (National Type Evaluation Program). NTEP requirements apply in the U.S.A. and Canada.
- OIML (Organization of Legal Metrology). OIML requirements apply in all other world areas.

Depending on the regulatory agency that governs your installation, different setup, configuration, and operation methods are applicable.

Secured vs. unsecured

When the Weights & Measures application is installed, the transmitter is always “secured” or “unsecured.” The transmitter leaves the factory in unsecured mode, with Status Alarm A027: Security Breach active. Additionally, flow measurement may be disabled. Measurement data from an unsecured transmitter cannot be used for custody transfer applications.

To clear the alarm and enable flow measurement, you must configure the Weights & Measures application and secure the transmitter. When the transmitter is secured, the alarm is cleared and flow measurement is enabled automatically.

Security types and requirements

Before using the transmitter for Weights & Measures measurement, both metrological security and physical security must be implemented.

Metrological security	Metrological security protects the transmitter from all changes that would affect measurement. This includes changes to configuration and some maintenance procedures. Micro Motion implements metrological security via “software security.” Software security is a setting inside the transmitter that programmatically disables the prohibited actions. Software security can be enabled or disabled from ProLink III. Practically speaking, software security provides complete protection against unauthorized changes or actions.
Physical security	Physical security is implemented by a seal installed by a certified Weights & Measures inspector. The seal prevents access to the service port terminals. Although the seal can be broken easily, it cannot be replaced by anybody other than a Weights & Measures inspector. This makes it easy to detect that security has been violated. If the seal is not intact, transmitter measurements are not valid for custody transfer.

Configuration methods

You must use ProLink III and a service port connection to configure the Weights & Measures parameters.

8.2 Set up the Weights & Measures application using ProLink III

When your transmitter is set up to comply with OIML or NTEP requirements, and the transmitter is secured, selected measurement data from the transmitter is approved for Weights & Measures applications.

Prerequisites

Important

Review the Weights & Measures requirements for your location and ensure that you are complying with all local requirements as well as the OIML or NTEP requirements.

If necessary for your installation, arrange for a site visit by a certified Weights & Measures inspector, and ensure that the inspector is present for the appropriate portions of this procedure.

Ensure that the transmitter is ready to be secured, i.e., it is configured as desired and you have performed all appropriate tests and adjustments. After the transmitter is secured, you cannot make any changes to configuration, many maintenance actions are disallowed, and some operator actions are disallowed.

Procedure

1. Make a service port connection from ProLink III to your transmitter.
2. Choose **Device Tools** > **Configuration** > **Weights & Measures**and set **Regulatory Agency** to the apropriate regulatory agency for your application.

Option	Description
NTEP	Regulatory agency for the U.S.A. and Canada
OIML	Regulatory agency for all other world areas

3. Choose **Device Tools** > **Configuration** > **Totalizer Control Methods** and set totalizer control methods as desired.

Parameter	Option
Reset Totalizers from Display	• Enabled: You can reset totalizers from the display, whether or not the transmitter is secured. • Disabled: You can reset totalizers from the display only when the transmitter is unsecured.
Reset Totalizers via Remote Communications	• Enabled: You can reset totalizers using digital communications, whether or not the transmitter is secured. • Disabled: You can reset totalizers using digital communications only when the transmitter is unsecured.

Digital communications refers to any method that uses Modbus or HART communications to interact with the transmitter. This includes ProLink III, the Field Communicator, and any host.

4. If required for your installation, choose **Device Tools** > **Configuration** > **Transmitter Display** > **Display Security**, then enable and configure a password for the alarm menu.

   Security for the alarm menu is required under German law for PTB-type approval for gas applications.

5. If required for your installation, choose **Device Tools** > **Device Information**, then read and record the firmware checksum values for the transmitter and the core processor.

   The checksum values for the transmitter firmware and the core processor firmware must be read during meter commissioning to meet Weights & Measures requirements for gas applications in Germany. They may also be useful for MID/Welmec 7.2 test reports.

6. If required for your installation, monitor the zero value of your system:

   a. Choose **Device Tools** > **Configuration** > **Transmitter Display** > **Display Variables** and configure **Field Verification Zero**(**FVZ**) as a display variable.

   b. At the transmitter display, read and record the current value of **FVZ**.

   FVZ is a diagnostic variable that monitors the zero value over a period of 3 minutes. It must be read during meter commissioning to comply with MID requirements for Weights & Measures applications in Measuring Instrument Directive (MID) 2004/22/EC. Refer to your Standard Operating Procedures documentation for detailed instructions.

7. Enable software security: **Device Tools** > **Configuration** > **Weights & Measures** > **Software Security**.

Important

Depending on local requirements, this step may need to be witnessed by a certified Weights & Measures inspector.

After this step, the transmitter is in a condition of metrological security (measurement security). The transmitter performs the following actions:

- Securing all measurement parameters. You can read the current configurations but you cannot change them.
- Clearing Status Alert A027: Security Breach.

8. Install the physical seal.

Important

In most installations, the physical seal is a wire seal that must be installed by a certified Weights & Measures inspector. The seal is provided by the inspector. The physical seal is inserted through the locking clamps on the transmitter (if available on your transmitter).

Figure 8-1: Example of locking clamp and seal on transmitter

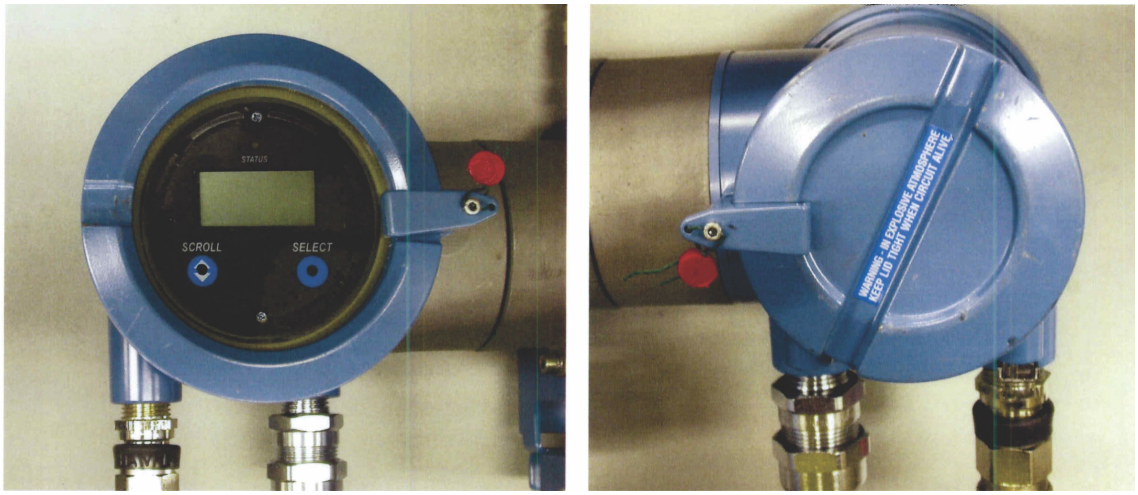

Part III

Operations, maintenance, and troubleshooting

Chapters covered in this part:

- *Transmitter operation*
- *Operate the transmitter with the Weights & Measures application*
- *Measurement support*
- *Troubleshooting*

9 Transmitter operation

Topics covered in this chapter:

- *Record the process variables*
- *View process variables*
- *View transmitter status using the status LED*
- *View and acknowledge status alerts*
- *Read totalizer and inventory values*
- *Start and stop totalizers and inventories*
- *Reset totalizers*
- *Reset inventories*

9.1 Record the process variables

Micro Motion suggests that you make a record of specific process variable measurements, including the acceptable range of measurements, under normal operating conditions. This data will help you recognize when the process or diagnostic variables are unusually high or low, and may help you diagnose and troubleshoot application issues.

Procedure

Record the following process and diagnostic variables, under normal operating conditions.

Variable	Measurement		
	Typical average	Typical high	Typical low
Flow rate			
Density			
Temperature			
Tube frequency			
Pickoff voltage			
Drive gain			

9.2 View process variables

Display	Scroll to the desired process variable. If **AutoScroll** is enabled, you can wait until the process variable is displayed. See *Section 9.2.1* for more information.
ProLink III	View the desired variable on the main screen under **Process Variables**. See *Section 9.2.2* for more information.
Field Communicator	**Overview** > **Shortcuts** > **Variables** > **Process Variables**

Overview

Process variables provide information about the state of the process fluid, such as flow rate, density, and temperature, as well as running totals. Process variables can also provide data about flowmeter operation, such as drive gain and pickoff voltage. This information can be used to understand and troubleshoot your process.

9.2.1 View process variables using the display

View the desired process variables.

The display shows the configured display variables. For each display variable, the display reports the abbreviated name of the process variable (for example, DENS for density), the current value of that process variable, and the associated unit of measure (for example, G/CM3).

If **Auto Scroll** is enabled, the display cycles through the display variables, showing each display variable for a user-specified number of seconds. Whether or not **Auto Scroll** is enabled, you can activate **Select** to move to the next display variable.

Figure 9-1: Transmitter display features

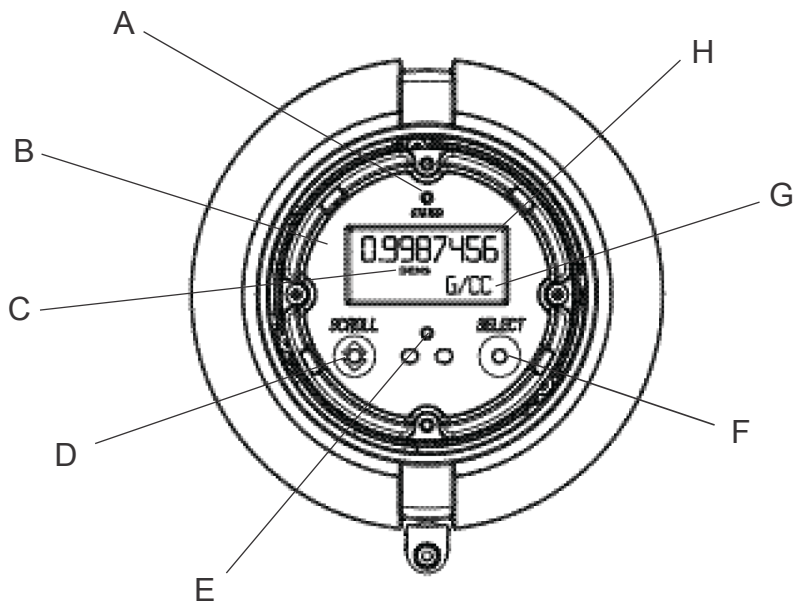

A. Status LED
B. Display (LCD panel)
C. Process variable
*D. **Scroll** optical switch*
*E. Optical switch indicator: turns red when either **Scroll** or **Select** is activated*
*F. **Select** optical switch*
G. Unit of measure for process variable
H. Current value of process variable

9.2.2 View process variables and other data using ProLink III

Monitor process variables, diagnostic variables, and other data to maintain process quality.

ProLink III automatically displays process variables, diagnostic variables, and other data on the main screen.

Tip
ProLink III allows you to choose the process variables that appear on the main screen. You can also choose whether to view data in Analog Gauge view or digital view, and you can customize the gauge settings. For more information, see the ProLink III user manual.

9.2.3 View process variables using the Field Communicator

Monitor process variables to maintain process quality.

- To view current values of basic process variables, choose **Overview**.

- To view a more complete set of process variables, plus the current state of the outputs, choose **Service Tools** > **Variables**.

9.3 View transmitter status using the status LED

The status LED shows the current alert condition of the transmitter. The status LED is located on the face of the transmitter.

Observe the status LED.

- If your transmitter has a display, you can view the status LED with the transmitter housing cover in place.
- If your transmitter does not have a display, it does not have a status LED. This option is not available.

To interpret the status LED, see the following table.

Restriction

If **LED Blinking** is disabled, the status LED will flash only during calibration. It will not flash to indicate an unacknowledged alarm.

Table 9-1: Transmitter status reported by status LED

LED state	Description	Recommendation
Solid green	No alerts are active.	Continue with configuration or process measurement.
Flashing green (if enabled)	Unacknowledged corrected condition (no alert)	Continue with configuration or process measurement. Acknowledge the alert if you choose.
Solid yellow	One or more low-severity alerts are active.	A low-severity alert condition does not affect measurement accuracy or output behavior. You can continue with configuration or process measurement, but Micro Motion still recommends identifying and resolving the alert condition.
Flashing yellow (if enabled)	Calibration in progress, or Known Density Verification in progress. One or more low-severity alerts are active and have not been acknowledged.	A low-severity alert condition does not affect measurement accuracy or output behavior. You can continue with configuration or process measurement, but Micro Motion still recommends identifying and resolving the alert condition.
Solid red	One or more high-severity alerts are active.	A high-severity alert condition affects measurement accuracy and output behavior. Resolve the alert condition before continuing.

Table 9-1: Transmitter status reported by status LED *(continued)*

LED state	Description	Recommendation
Flashing red (if enabled)	One or more high-severity alerts are active and have not been acknowledged.	A high-severity alert condition affects measurement accuracy and output behavior. Resolve the alert condition before continuing. Acknowledge the alert if you choose.

9.4 View and acknowledge status alerts

The transmitter posts status alerts whenever a process variable exceeds its defined limits or the transmitter detects a fault condition. You can view active alerts, and you can acknowledge alerts. Acknowledging alerts is not required.

9.4.1 View and acknowledge alerts using the display

You can view a list containing all alerts that are active, or inactive but unacknowledged. From this list, you can acknowledge individual alerts.

Note

Only Fault and Informational alerts are listed. The transmitter automatically filters out alerts with **Status Alert Severity** set to Ignore.

Prerequisites

Operator access to the alert menu must be enabled (default setting). If operator access to the alert menu is disabled, you must use another method to view or acknowledge status alerts.

Procedure

See *Figure 9-2*.

Figure 9-2: Using the display to view and acknowledge the status alerts

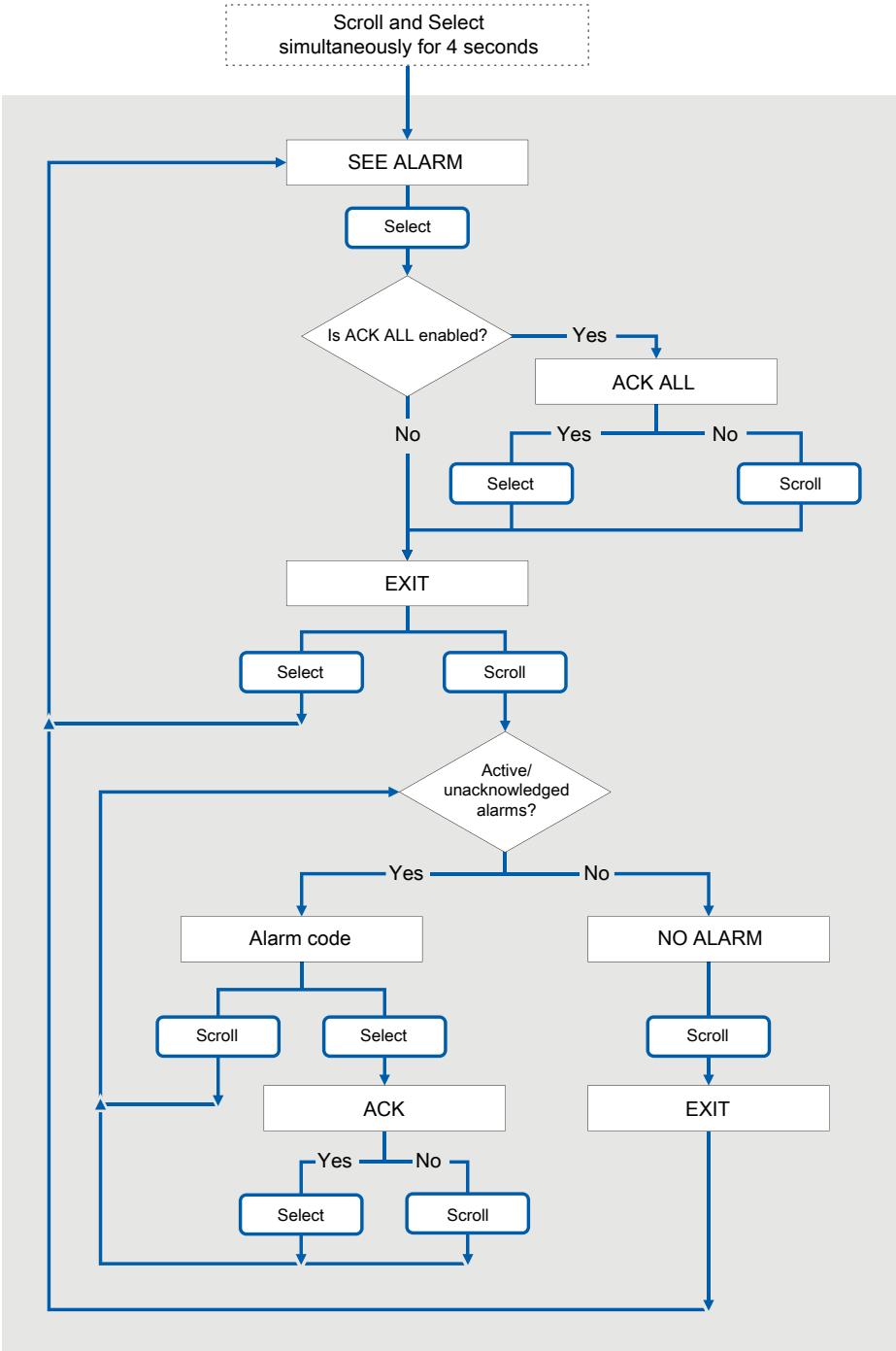

Postrequisites

- To clear the following alerts, you must correct the problem, acknowledge the alert, then power-cycle the transmitter: A001, A002, A010, A011, A012, A013, A018, A019, A022, A023, A024, A025, A028, A029, A031.
- For all other alerts:
  - If the alert is inactive when it is acknowledged, it will be removed from the list.
  - If the alert is active when it is acknowledged, it will be removed from the list when the alert condition clears.

Related information

Alert data in transmitter memory

9.4.2 View and acknowledge alerts using ProLink III

You can view a list containing all alerts that are active, or inactive but unacknowledged. From this list, you can acknowledge individual alerts or choose to acknowledge all alerts at once.

1. View alerts on the ProLink III main screen under **Alerts**.

   All active or unacknowledged alerts are listed, and displayed according to the following categories:

Category	Description
Failed: Fix Now	A meter failure has occurred and must be addressed immediately.
Maintenance: Fix Soon	A condition has occurred that can be fixed at a later time.
Advisory: Informational	A condition has occurred, but requires no maintenance from you.

Notes

- All fault alerts are displayed in the **Failed: Fix Now** category.
- All information alerts are displayed in either the **Maintenance: Fix Soon** category or the **Advisory: Informational** category. The category assignment is hard-coded.
- The transmitter automatically filters out alerts with **Alert Severity** set to Ignore.

2. To acknowledge a single alert, check the **Ack** checkbox for that alert. To acknowledge all alerts at once, click **Ack All**.

Postrequisites

- To clear the following alerts, you must correct the problem, acknowledge the alert, then power-cycle the transmitter: A001, A002, A010, A011, A012, A013, A018, A019, A022, A023, A024, A025, A028, A029, A031.
- For all other alerts:
  - If the alert is inactive when it is acknowledged, it will be removed from the list.

- If the alert is active when it is acknowledged, it will be removed from the list when the alert condition clears.

Related information

Alert data in transmitter memory

9.4.3 View alerts using the Field Communicator

You can view a list containing all alerts that are active, or inactive but unacknowledged.

- To view active or unacknowledged alerts, choose **Service Tools** > **Alerts**.

  All active alerts and unacknowledged alerts are listed.

  Note
  Only Fault and Informational alerts are listed. The transmitter automatically filters out alerts with **Status Alert Severity** set to Ignore.

- To refresh the list, choose **Service Tools** > **Alerts** > **Refresh Alerts**.

Related information

Alert data in transmitter memory

9.4.4 Alert data in transmitter memory

The transmitter maintains three sets of data for every alert that is posted.

For each alert occurrence, the following three sets of data are maintained in transmitter memory:

- Alert List
- Alert Statistics
- Recent Alerts

Alert data structure	Transmitter action if condition occurs	
	Contents	**Clearing**
Alert List	As determined by the alert status bits, a list of: • All currently active alerts • All previously active alerts that have not been acknowledged	Cleared and regenerated with every transmitter power cycle
Alert Statistics	One record for each alert (by alert number) that has occurred since the last master reset. Each record contains: • A count of the number of occurrences • Timestamps for the most recent posting and clearing	Not cleared; maintained across transmitter power cycles

Alert data structure	Transmitter action if condition occurs	
	Contents	**Clearing**
Recent Alerts	50 most recent alert postings or alert clearings	Not cleared; maintained across transmitter power cycles

9.5 Read totalizer and inventory values

Display	To read a totalizer or inventory value from the display, it must be configured as a display variable.
ProLink III	View the desired variable on the main screen under **Process Variables**.
Field Communicator	**Service Tools** > **Variables** > **Totalizer Control**

Overview

Totalizers keep track of the total amount of mass or volume measured by the transmitter since the last totalizer reset. Inventories keep track of the total amount of mass or volume measured by the transmitter since the last inventory reset.

Tip
You can use the inventories to keep a running total of mass or volume across multiple totalizer resets.

9.6 Start and stop totalizers and inventories

Display	See *Section 9.6.1*.
ProLink III	**Device Tools** > **Totalizer Control** > **Totalizer and Inventories** > **Start All Totals** **Device Tools** > **Totalizer Control** > **Totalizer and Inventories** > **Stop All Totals**
Field Communicator	**Service Tools** > **Variables** > **Totalizer Control** > **All Totalizers** > **Start Totalizers** **Service Tools** > **Variables** > **Totalizer Control** > **All Totalizers** > **Stop Totalizers**

Overview

When you start a totalizer, it tracks process measurement. In a typical application, its value increases with flow. When you stop a totalizer, it stops tracking process measurement and its value does not change with flow. Inventories are started and stopped automatically, when totalizers are started and stopped.

Important

Totalizers and inventories are started or stopped as a group. When you start any totalizer, all other totalizers and all inventories are started simultaneously. When you stop any totalizer, all other totalizers and all inventories are stopped simultaneously. You cannot start or stop inventories directly.

9.6.1 Start and stop totalizers and inventories using the display

Prerequisites

The Totalizer Start/Stop display function must be enabled.

At least one totalizer must be configured as a display variable.

Procedure

- To start all totalizers and inventories using the display:
  1. **Scroll** until the word TOTAL appears in the lower left corner of the display.

     Important

     Because all totalizers are started or stopped together, it does not matter which total you use.

  2. **Select**.
  3. **Scroll** until START appears beneath the current totalizer value.

     `Exit` displays beneath the current totalizer value.

  4. **Select**.
  5. **Select** again to confirm.
  6. **Scroll** to EXIT.
- To stop all totalizers and inventories using the display:
  1. **Scroll** until the word TOTAL appears in the lower left corner of the display.

     Important

     Because all totalizers are started or stopped together, it does not matter which total you use.

  2. **Select**.
  3. **Scroll** until STOP appears beneath the current totalizer value.
  4. **Select**.
  5. **Select** again to confirm.
  6. **Scroll** to EXIT.

9.7 Reset totalizers

Display	See *Section 9.7.1*.
ProLink III	**Device Tools** > **Totalizer Control** > **Totalizer and Inventories** > **Reset Mass Total** **Device Tools** > **Totalizer Control** > **Totalizer and Inventories** > **Reset Volume Total** **Device Tools** > **Totalizer Control** > **Totalizer and Inventories** > **Reset Gas Total** **Device Tools** > **Totalizer Control** > **Totalizer and Inventories** > **Reset All Totals**
Field Communicator	**Service Tools** > **Variables** > **Totalizer Control** > **Mass** > **Mass Total** **Service Tools** > **Variables** > **Totalizer Control** > **Gas Standard Volume** > **Volume Total** **Service Tools** > **Variables** > **Totalizer Control** > **Gas Standard Volume** > **GSV Total** **Service Tools** > **Variables** > **Totalizer Control** > **All Totalizers** > **Reset All Totals**

Overview

When you reset a totalizer, the transmitter sets its value to 0. It does not matter whether the totalizer is started or stopped. If the totalizer is started, it continues to track process measurement.

Tip

When you reset a single totalizer, the values of other totalizers are not reset. Inventory values are not reset.

9.7.1 Reset totalizers using the display

Prerequisites

The Totalizer Reset display function must be enabled.

The totalizer that you want to reset must be configured as a display variable. For example:

- If you want to reset the mass totalizer, **Mass Total** must be configured as a display variable.
- If you want to reset the volume totalizer, **Volume Total** must be configured as a display variable.

Procedure

- To reset the mass totalizer:
  1. **Scroll** until the mass totalizer value appears.
  2. **Select**.

     `Exit` displays beneath the current totalizer value.
  3. Scroll until `Reset` displays beneath the current totalizer value.
  4. **Select**.

`Reset` and `Yes?` alternately flash beneath the current totalizer value.

5. **Select** again to confirm.
6. **Scroll** to EXIT.
7. **Select**.

- To reset the volume totalizer:

1. **Scroll** until the volume totalizer value appears.
2. **Select**.

   `Exit` displays beneath the current totalizer value.

3. Scroll until `Reset` displays beneath the current totalizer value.
4. **Select**.

   `Reset` and `Yes?` alternately flash beneath the current totalizer value.

5. **Select** again to confirm.
6. **Scroll** to EXIT.
7. **Select**.

- To reset the gas standard volume totalizer:

1. **Scroll** until the gas standard volume totalizer value appears.
2. **Select**.

   `Exit` displays beneath the current totalizer value.

3. Scroll until `Reset` displays beneath the current totalizer value.
4. **Select**.

   `Reset` and `Yes?` alternately flash beneath the current totalizer value.

5. **Select** again to confirm.
6. **Scroll** to EXIT.
7. **Select**.

9.8 Reset inventories

ProLink III	**Device Tools > Totalizer Control > Totalizer and Inventories > Reset Mass Inventory** **Device Tools > Totalizer Control > Totalizer and Inventories > Reset Volume Inventory** **Device Tools > Totalizer Control > Totalizer and Inventories > Reset Gas Inventory** **Device Tools > Totalizer Control > Totalizer and Inventories > Reset All Inventories**

Overview

When you reset an inventory, the transmitter sets its value to 0. It does not matter whether the inventory is started or stopped. If the inventory is started, it continues to track process measurement.

Tip

Mass and volume inventory totals cannot be set separately. They can only be reset together simultaneously.

Prerequisites

To use ProLink III to reset the inventories, the feature must be enabled.

- To enable inventory reset in ProLink III:
  1. Choose **Tools** > **Options**.
  2. Select **Reset Inventories from ProLink III**.
  3. Select **OK**.

Once enabled, this feature remains enabled until it is disabled.

10 Operate the transmitter with the Weights & Measures application

Topics covered in this chapter:

- *Operate the transmitter when the Weights & Measures application is installed*
- *Switch between secured and unsecured mode*
- *Clear Status Alarm A027: Security Breach*
- *Replacing the core processor in a Weights & Measures installation*

Information in this chapter is applicable only if your transmitter was ordered with the Weights & Measures application.

10.1 Operate the transmitter when the Weights & Measures application is installed

When the Weights & Measures application is installed, many of the basic functions of the transmitter are modified.

- To make a connection:
  - If the physical seal is not installed, you can use any supported connection type.
  - If the physical seal is installed, you cannot make a service port connection. You can use any other supported connection type.
- To read or obtain process data:
  - For an approved measurement, you must use an approved method.
  - If the measurement does not have to be approved, you can use any available method.

Important

The behavior of transmitter outputs and process variable values is modified by the Weights & Measures application. Ensure that you know the effects of this application on outputs and process variable values.

- To reset totalizers:
  - If the transmitter is unsecured, you can reset totalizers. If you reset one totalizer, all other totalizers are reset automatically.
  - If the transmitter is secured, you may or may not be able to reset totalizers, depending on configuration. If totalizer reset is enabled, you cannot reset totalizers unless the flow rate is 0. To reset totalizers from the display, you may need to enter the alarm menu password, whether or not you have enabled it. The default value for **Alarm Menu Password** is 1234.

- You cannot stop totalizers while the tranmitter is secured.
- You cannot reset inventories while the transmitter is secured.

10.1.1 Approved methods to read or obtain process data

When the Weights & Measures application is installed, process data is approved for custody transfer use only if an approved method is used for reading or obtaining it.

Note

On the primary mA output, HART/Bell 202 communications may be used to poll for either temperature or pressure, in conjunction with process data reporting.

Table 10-1: NTEP-approved methods to read or obtain process data

Process data	mA output(s)	Frequency output(s)	Transmitter display
Mass		✓	✓
Volume		✓	✓
Density	✓		✓
Totalizer values			✓
Inventory values			✓
Fault indication		✓	

Table 10-2: OIML-approved methods to read or obtain process data

Process data	mA output(s)	Frequency output(s)	Transmitter display
Mass		✓	✓
Volume		✓	✓
Density	✓		✓
Totalizer values			✓(1)
Inventory values			✓
Fault indication		✓	

(1) Special handling is applied to large totalizer values.

10.1.2 Large totalizer values on the display (OIML applications only)

If **Approval** is set to OIML and totalizer values become large enough, the display handles large values in a special way. The value displayed may not reflect the actual value.

The display is able to show a maximum of eight characters, including the decimal point. For all totalizer values configured as display variables, the position of the decimal point on the display is fixed to the configured precision of the display variable.

When the totalizer reaches the largest value that can be displayed in these circumstances:

- The digits roll over.
- The decimal point does not move.
- The number of digits on the display does not change.
- The internal totalizer is reset to 0.

For example, the value 99999.999 rolls over to 00000.000.

Tip

If you are not sure whether or not the totalizer value on the display has rolled over, check the value by using another method to read the current data.

Notes

- The mass and volume totalizers do not necessarily roll over at the same time.
- This feature does not apply to inventories. The display presents large inventory values in the standard manner.

10.1.3 Effect of the Weights & Measures application on process measurement and outputs

When the Weights & Measures application is installed, process measurement and reporting is modified to prevent unauthorized use of the data. Specific changes are controlled by whether the transmitter is secured or unsecured.

Table 10-3: Transmitter outputs and process data when Approvals=NTEP

Function		Transmitter status	
		Unsecured	**Secured**
Outputs	mA output behavior	If reporting a flow variable, mA output reports zero flow. Otherwise, normal.	Normal
	Frequency output behavior	Inactive (produces no pulses), even under fault conditions	Normal
	Discrete output behavior	Normal	Normal
Process variables	All flow rates	Reported as zero	Reported normally
	Density	Reported normally	Reported normally
	Temperature	Reported normally	Reported normally
Totalizers	Values	Do not increment or decrement	Increment normally
Inventories	Values	Do not increment or decrement	Increment normally

Table 10-4: Transmitter outputs and process data when Approvals=OIML

Function		Transmitter status	
		Unsecured	Secured
Outputs	mA output behavior	Performs configured fault action	Normal
	Frequency output behavior	Performs configured fault action	Normal
	Discrete output behavior	Performs configured fault action	Normal
Process variables	All flow rates	Reported normally	Reported normally
	Density	Reported normally	Reported normally
	Temperature	Reported normally	Reported normally
Totalizers	Values	Do not increment or decrement	Increment normally
Inventories	Values	Do not increment or decrement	Increment normally

10.1.4 Effect of the Weights & Measures application on operation and maintenance functions

When the Weights & Measures application is installed, specific operations and maintenance activities may be disallowed. You can switch to unsecured mode, perform the required actions, then switch back to secured mode.

Table 10-5: Available actions when Approvals=NTEP

Function		Transmitter status	
		Unsecured	Secured
Connecting from ProLink II, ProLink III, the Field Communicator, or a host		All supported connection types are available.	Physical security prevents access to the service port terminals. HART/Bell 202 connections can be used to read data from the transmitter, but software security prevents writing to the transmitter.
Configuration	Reading	Allowed	Allowed
	Changing	Allowed	Not allowed
Calibration	Zero	Allowed	Not allowed
	Density	Allowed	Not allowed
	Temperature	Allowed	Not allowed
Smart Meter Verification	Outputs set to Continue Measuring	Allowed	Allowed
	Outputs set to Fault	Allowed	Allowed
	Outputs set to Last Measured Value	Allowed	Not allowed
External pressure and temperature data	Retrieved by polling	Allowed	Allowed

Table 10-5: Available actions when Approvals=NTEP *(continued)*

Function		Transmitter status	
		Unsecured	**Secured**
	Written by Modbus or HART host	Allowed	Not allowed
Testing and trimming outputs	mA output loop test	Allowed	Not allowed
	mA output trim	Allowed	Not allowed
	Frequency output loop test	Not allowed	Not allowed
	Discrete output loop test	Allowed	Not allowed
Totalizers	Resetting	Allowed. If any single totalizer is reset, all other totalizers are reset automatically.	May or may not be allowed, depending on configuration. Can be performed only if flow rate is zero. If any single totalizer is reset, all other totalizers are reset automatically.
	Starting	Not allowed	N/A
	Stopping	N/A	Not allowed
Inventories	Resetting	Not allowed	Not allowed
Sensor simulation		Allowed	Not allowed

Table 10-6: Available actions when Approvals=OIML

Function		Transmitter status	
		Unsecured	**Secured**
Connecting from ProLink II, ProLink III, the Field Communicator, or a host		All supported connection types are available.	Physical security prevents access to the service port terminals. HART/Bell 202 connections can be used to read data from the transmitter, but software security prevents writing to the transmitter.
Configuration	Reading	Allowed	Allowed
	Changing	Allowed	Not allowed
Calibration	Zero	Allowed	Not allowed
	Density	Allowed	Not allowed
	Temperature	Allowed	Not allowed
Smart Meter Verification	Outputs set to Continue Measuring	Allowed	Allowed
	Outputs set to Fault	Allowed	Allowed
	Outputs set to Last Measured Value	Allowed	Not allowed

Table 10-6: Available actions when Approvals=OIML *(continued)*

Function		Transmitter status	
		Unsecured	**Secured**
External pressure and temperature data	Retrieved by polling	Allowed	Allowed
	Written by Modbus or HART host	Allowed	Not allowed
Outputs	mA output loop test	Allowed	Not allowed
	mA output trim	Allowed	Not allowed
	Frequency output loop test	Allowed	Not allowed
	Discrete output loop test	Allowed	Not allowed
Process variables	All flow rates	Reported normally	Reported normally
	Density	Reported normally	Reported normally
	Temperature	Reported normally	Reported normally
Totalizers	Resetting	Allowed. If any single totalizer is reset, all other totalizers are reset automatically.	May or may not be allowed, depending on configuration. Can be performed only if flow rate is zero. If any single totalizer is reset, all other totalizers are reset automatically.
	Starting	Not allowed	N/A
	Stopping	N/A	Not allowed
Inventories	Resetting	Allowed	Not allowed
Sensor simulation		Allowed	Not allowed

10.2 Switch between secured and unsecured mode

You must switch to unsecured mode to change the transmitter configuration or perform many administrative tasks. You must switch back to secured mode in order to meet Weights & Measures requirements for process measurement.

You must use one of the following tools to switch modes:

- ProLink III
- The Custody Transfer switching utility. The switching utility is free, and is available from the Software Downloads page at *www.emerson.com*.

The controls are not accessible in any other way.

10.2.1 Switch between secured and unsecured mode using ProLink III

Prerequisites

Before switching to unsecured mode, ensure that you will be able to switch back to secured mode. Because switching to unsecured mode requires breaking the physical seal, switching back to secured mode may require a site visit from a certified Weights & Measures inspector and reinstallation of the physical seal.

Ensure that the wiring is in place for a service port connection. You may need to break the seal and remove the clamp.

Procedure

- To switch from secured mode to unsecured mode:
  1. Make a service port connection to your transmitter.
  2. Choose **Device Tools** > **Configuration** > **Weights & Measures**.
  3. Set **Software Security**to Disabled.
- To switch from unsecured mode to secured mode:
  1. Make a service port connection to your transmitter.
  2. Choose **Device Tools** > **Configuration** > **Weights & Measures**.
  3. Set **Software Security**to Enabled.

10.2.2 Switch between secured and unsecured mode using the switching utility

Prerequisites

The switching utility must be installed on your PC. The switching utility is available from the Software Downloads page at *www.emerson.com*.

Before switching to unsecured mode, ensure that you will be able to switch back to secured mode. Because switching to unsecured mode requires breaking the physical seal, switching back to secured mode may require a site visit from a certified Weights & Measures inspector and reinstallation of the physical seal.

Ensure that the wiring is in place for a service port connection. You may need to break the seal and remove the clamp.

Procedure

- To switch from secured mode to unsecured mode:
  1. Run the switching utility.
  2. Select the COM port to use for the connection.
  3. Click **Disable Custody Transfer**.

- To switch from unsecured mode to secured mode:
  1. Run the switching utility.
  2. Select the COM port to use for the connection.
  3. Click **Enable Custody Transfer**.

10.3 Clear Status Alarm A027: Security Breach

Status Alarm A027: Security Breach is posted if the transmitter is switched to unsecured mode or if the transmitter detects that the core processor ID has changed.

1. If the transmitter is in secured mode, switch to unsecured mode.
2. Take any required actions related to the cause of the security breach.
3. Switch to secured mode.

10.4 Replacing the core processor in a Weights & Measures installation

In a Weights & Measures installation, replacing the core processor requires re-sealing the transmitter.

When the transmitter is first secured, the core processor's unique ID is registered with the transmitter. If you replace the core processor with another core processor, the transmitter will post Status Alarm A026: Sensor/Xmtr Communication Error. To clear this alarm, you must switch the transmitter to unsecured mode and resecure it. This requires breaking the physical seal and reinstalling it when the entire process is complete.

Other procedures may be required. Refer to the Weights & Measurements documentation for your installation.

Important

In most cases, the physical seal must be installed by a certified Weights & Measures inspector.

11 Measurement support

Topics covered in this chapter:

- *Options for measurement support*
- *Use Smart Meter Verification (SMV)*
- *Use PVR, TBR, and TMR*
- *Piecewise linearization (PWL) for calibrating gas meters*
- *Use the fuel consumption application*
- *Zero the meter*
- *Validate the meter*
- *Perform a (standard) D1 and D2 density calibration*
- *Perform a D3 and D4 density calibration (T-Series sensors only)*
- *Perform temperature calibration*

11.1 Options for measurement support

Micro Motion provides several measurement support procedures to help you evaluate and maintain your flowmeter's accuracy.

The following methods are available:

- Smart Meter Verification (SMV) evaluates the structural integrity of the sensor tubes by comparing current tube stiffness to the stiffness measured at the factory. Stiffness is defined as the load per unit deflection, or force divided by displacement. Because a change in structural integrity changes the sensor’s response to mass and density, this value can be used as an indicator of measurement performance.
- Meter validation compares flowmeter measurements reported by the transmitter to an external measurement standard. Meter validation requires one data point.
- Calibration establishes the relationship between a process variable and the signal produced at the sensor. You can calibrate the flowmeter for zero, density, and temperature. Density and temperature calibration require two data points (low and high) and an external measurement for each.

Tips

- Perform SMV at regular intervals to get the best data on your meter's performance.
- To prove the meter against a regulatory standard, or to correct measurement error, use meter validation and meter factors.
- Before performing a field calibration, contact customer support to see if there is an alternative. In many cases, field calibrations have a negative effect on measurement accuracy.

11.2 Use Smart Meter Verification (SMV)

You can run an SMV test, view and interpret the results, and set up automatic execution.

11.2.1 SMV requirements

To use SMV, the transmitter must be paired with an enhanced core processor.

See *Table 11-1* for the minimum version of the transmitter, enhanced core processor, and communication tool needed to support SMV. (If you are going to perform SMV using the display, only the transmitter and enhanced core processor versions apply.)

Table 11-1: Minimum SMV version

Item	Minimum version (legacy)	Minimum basic SMV transmitter
Transmitter	6.0	8.0
Enhanced core processor	3.6	4.4
ProLink III	1.0	4.0
Field Communicator	HART device description: device rev 6, DD rev 2	HART device description: device rev 8, DD rev 1

If your devices or tools do not meet the minimum version requirements for SMV, you still may have access to an older version of meter verification if the option was ordered for your transmitter. See *Table 11-2* for a description of the major differences between the older meter verification and the newer SMV.

Table 11-2: Major differences between meter verification and SMV

Feature	Meter verification (older)	SMV (newer)
Measurement interruption	Suspended during the test (3 minutes)	No interruption necessary
Result storage	No results stored in the transmitter	Last 20 results stored in the transmitter (licensed SMV)
Results reporting	Pass/fail/abort	Pass/fail/abort comparison tables and graphs for stored test results(1)
Test start methods	Manual only	Manual, scheduled, event-based, Discrete Input

(1) Detailed test analyses such as comparison graphs are not available on the local display.

11.2.2 SMV test preparation

Although it is not necessary to match factory conditions or change the transmitter's configuration during an SMV test, the test will run more smoothly when conditions are stable.

SMV has an output mode called Continuous Measurement that allows the transmitter to keep measuring while the test is in progress. If you choose to run the test in Last Measured Value or Fault modes instead, the transmitter outputs will be held constant for the two minute duration of the test. If control loops depend on transmitter outputs, take appropriate action.

Avoid process instability during the test. If conditions are too unstable, the SMV test will abort. To maximize process stability:

- Maintain a constant fluid pressure and temperature.
- Avoid changes to fluid composition, e.g., two-phase flow or settling.
- Maintain a constant flow rate.

Tips

- The SMV test runs best when flow is stopped through the sensor.
- SMV is not affected by any configured transmitter parameters for flow, density, or temperature.

11.2.3 Run SMV

Run an SMV test using the display

1. Navigate to the Smart Meter Verification menu.

Figure 11-1: SMV – Top-level menu

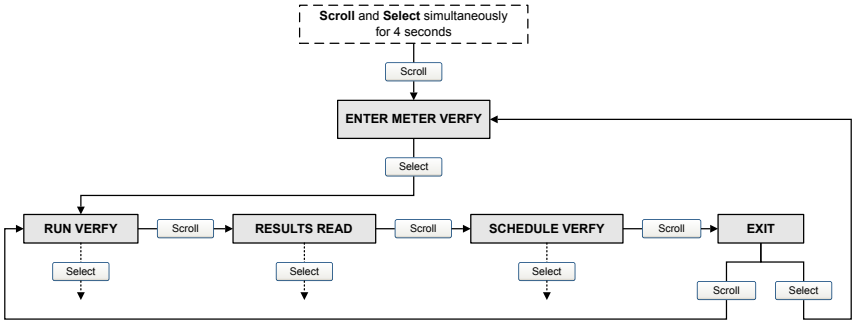

2. Choose **Run Verify**.
3. Choose **Outputs** and select the desired output behavior.

Option	Description
Continue Measr	During the test, all outputs will continue to report their assigned process variable. The test will run for approximately 90 seconds.
Fault	During the test, all outputs will go to their configured fault action. The test will run for approximately 140 seconds.

Option	Description
Last Value	During the test, all outputs will report the last measured value of their assigned process variable. The test will run for approximately 140 seconds.

While the test is in progress, dots traverse the display and test progress is shown.

Postrequisites

View the test results and take any appropriate actions.

SMV flowchart: Running a test using the display

Figure 11-2: Running an SMV test using the display

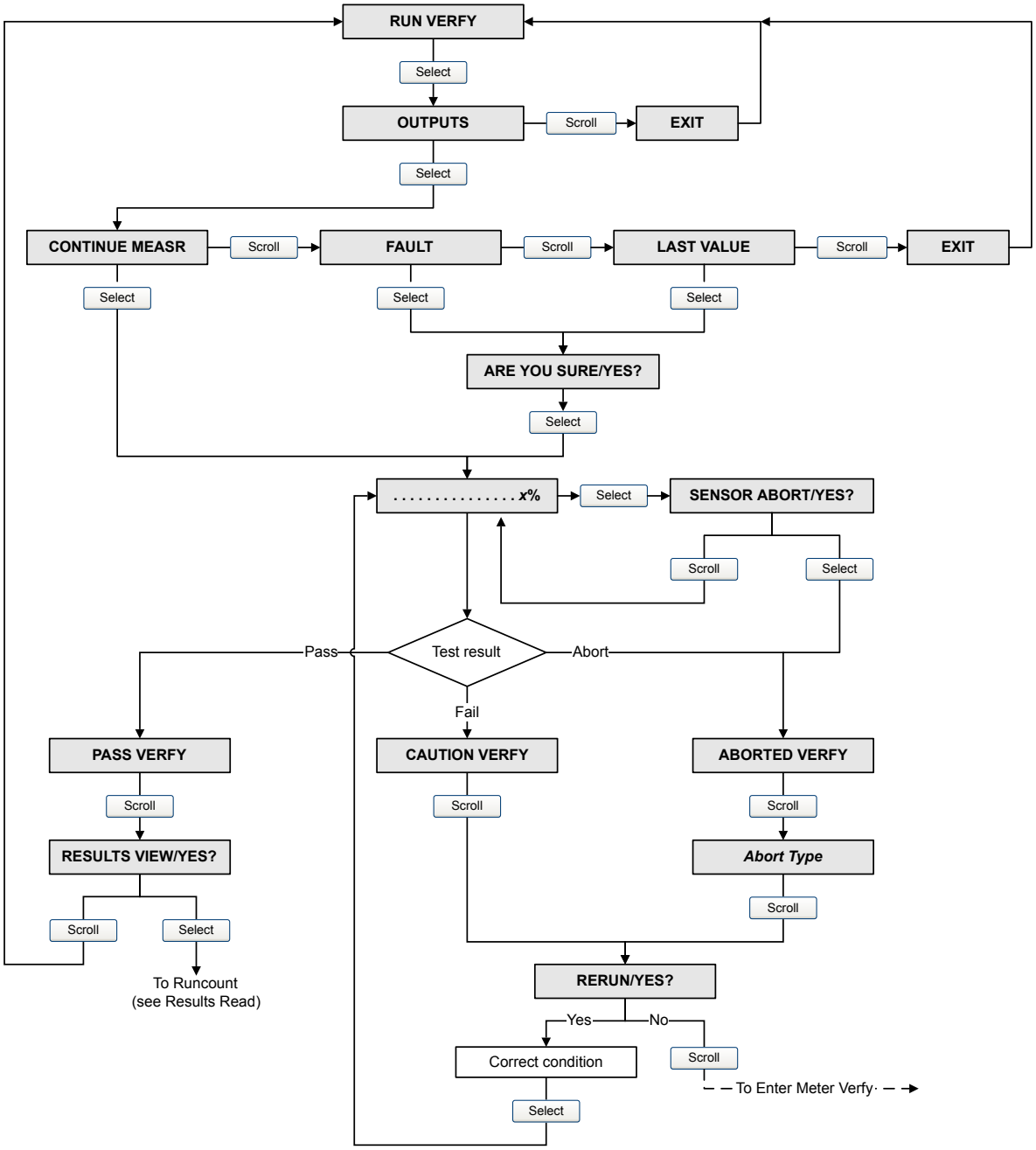

Run an SMV test using ProLink III

1. Choose **Device Tools** > **Diagnostics** > **Meter Verification** > **Run Test**.

You may need to wait a few seconds while ProLink III synchronizes its database with the transmitter data.

2. Enter any desired information on the Test Definition screen, and click **Next**.

   All information on this screen is optional.

3. Choose the desired output behavior.

Option	Description
Continue Measuring	During the test, all outputs will continue to report their assigned process variable. The test will run for approximately 90 seconds.
Held at Last Value	During the test, all outputs will report the last measured value of their assigned process variable. The test will run for approximately 140 seconds.
Held at Fault	During the test, all outputs will go to their configured fault action. The test will run for approximately 140 seconds.

4. Press **Start**.

   Test progress is displayed on the screen.

Postrequisites

View the test results and take any appropriate actions. You can also print the report.

Run an SMV test using the Field Communicator

1. Navigate to the Smart Meter Verification menu:
   - **Overview** > **Shortcuts** > **Meter Verification**
   - **Service Tools** > **Maintenance** > **Routine Maintenance** > **Meter Verification**
2. Choose **Manual Verification**.
3. Choose **Start**.
4. Set output behavior as desired, and press **OK** if prompted.

Option	Description
Continue Measuring	During the test, all outputs will continue to report their assigned process variable. The test will run for approximately 90 seconds.
Outputs Held at Last Value	During the test, all outputs will report the last measured value of their assigned process variable. The test will run for approximately 140 seconds.
Outputs Held at Fault	During the test, all outputs will go to their configured fault action. The test will run for approximately 140 seconds.

   Test progress is displayed on the screen.

Postrequisites

View the test results and take any appropriate actions.

11.2.4 View test data

You can view the results of the current test. You can also view results from previous tests.

Important
You can view previous test results and see detailed test reports only if SMV is licensed.

The transmitter stores the following information about the previous twenty SMV tests:

- Powered-on hours at the time of the test.
- Test result (Pass, Fail, Abort).
- Abort code, if applicable.

In addition, ProLink III provides a detailed test reporting and analysis framework. This information is stored on the PC where ProLink III is installed for tests that were run only on that PC. It includes:

- Timestamp from the PC clock
- Current flowmeter identification data
- Current flow and density configuration parameters
- Current zero values
- Current process values for mass flow rate, volume flow rate, density, temperature, and external pressure
- Customer and test descriptions (if entered by the user)

You can use ProLink III to run a test that displays a test result chart and a test report at the completion of the test. On-screen directions are provided to manipulate the test data or export the data to a CSV file for offline analysis.

View test result data using the display

1. If you have just run a test, results are displayed automatically at the end of the test.
2. If SMV is licensed, and you want to view results from previous tests:
   a. Navigate to the Smart Meter Verification menu.

Figure 11-3: SMV – Top-level menu

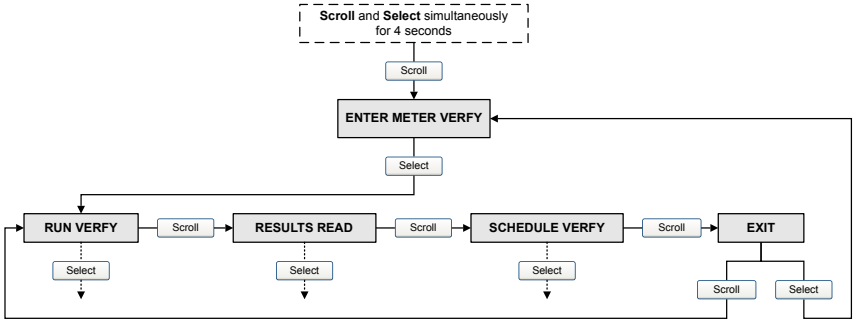

b. Scroll to **Results Read** and press **Select**.

   The runcount of the most recent test is displayed.

c. To view data for this test, press **Select**, then press **Scroll** to scroll through test data.

d. To select a different test, press **Scroll**, then press **Select** when the transmitter displays **Results More?**. When the desired test appears, as identified by runcount, press **Select**.

SMV flowchart: Viewing test results using the display

Figure 11-4: Viewing SMV test results using the display

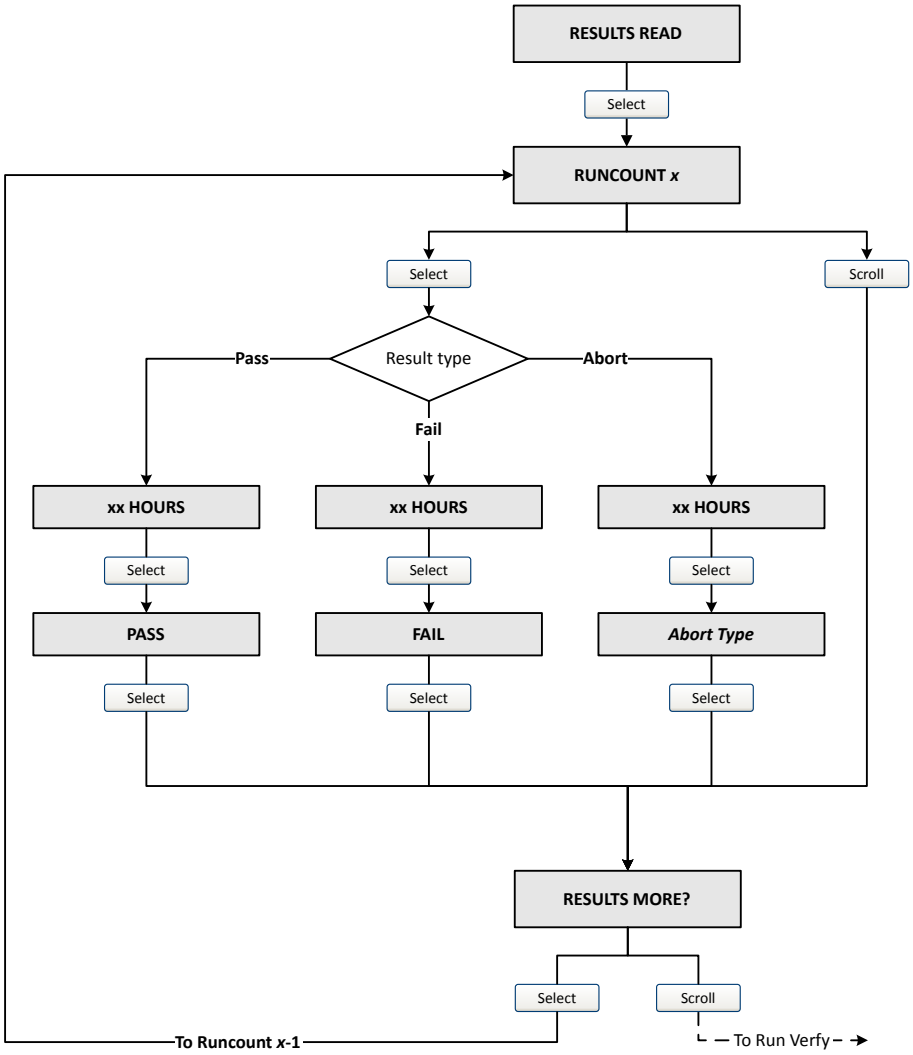

Note

If you have a basic (unlicensed version) of SMV, you will not be prompted for RESULTS MORE?.

View test result data using ProLink III

Prerequisites

You can view test result data only if your SMV is licensed and only for tests that were run on the PC you are currently using.

Procedure

1. Choose **Device Tools** > **Diagnostics** > **Meter Verification** and click **Previous Test Results**.

   The chart shows test results for all tests stored in the ProLink III database.

2. (Optional) Click **Next** to view and print a test report.
3. (Optional) Click **Export Data to CSV File** to save the data to a file on your PC.

View test result data using the Field Communicator

Prerequisites

You can view test result data only if your SMV is licensed.

Procedure

1. Navigate to the Smart Meter Verification menu:
   - **Overview** > **Shortcuts** > **Meter Verification**
   - **Service Tools** > **Maintenance** > **Routine Maintenance** > **Meter Verification**
2. (Optional) If the Field Communicator database is out of date, choose **Upload Results Data from Device**.
3. To view data from the most recent test, choose **Most Recent Test Results**.
4. To view data for all tests in the Field Communicator database:
   a. Press **Show Results Table**.

      Data from the most recent test is displayed.

   b. Press **OK** to scroll through data from previous tests.
   c. To exit the results table, press **Abort**.

Understanding SMV results

When the SMV test is completed, the result is reported as Pass, Fail, or Abort. (Some tools report the Fail result as `Advisory` instead.)

Pass Smart Meter Verification does a statistical check between the factory baseline value and the current Smart Meter Verification result. Pass indicates that the two values are statistically the same.

Fail The current SMV value is statistically different than the factory baseline value.
- If the meter passes the second test, the first result can be ignored.
- If the meter fails the second test, the flow tubes may be damaged. Call customer support.

Abort A problem occurred with the meter verification test (such as process instability) or you stopped the test manually. See *Table 11-3* for a list of abort codes, a description of each code, and possible actions you can take in response.

Table 11-3: SMV abort codes

Code	Description	Recommended actions
1	User-initiated abort	None required. Wait 15 seconds before starting another test.
3	Frequency drift	Ensure that temperature, flow, and density are stable, and rerun the test.
5	High drive gain	Ensure that flow is stable, minimize entrained gas, and rerun the test.
8	Unstable flow	Check factors that could cause process instability, then rerun the test. To maximize process stability: • Maintain a constant fluid pressure and temperature. • Avoid changes to fluid composition, such as two-phase flow or settling. • Maintain a constant flow rate.
12	There is a fault present and SMV cannot run	View the Alerts present on the device and take any necessary actions to clear them.
13	No factory reference data for meter verification test performed on air	Contact customer service.
14	No factory reference data for meter verification test performed on water	Contact customer service.
15	No configuration data for meter verification	Contact customer service.
Other	General abort	Repeat the test. If the test aborts again, contact customer service.

11.2.5 Schedule automatic execution of the SMV test

You can set up and run a single test at a user-defined future time. You can also set up and run tests on a regular schedule.

Manage scheduled test execution using the display

1. Navigate to the Smart Meter Verification menu.

Figure 11-5: SMV – Top-level menu

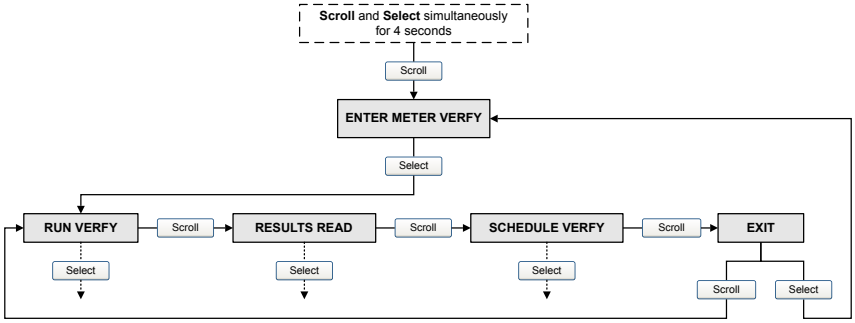

2. Scroll to **Schedule Verfy** and press **Select**.
3. To schedule a single test or the first test in recurring execution:
   a. Scroll to **Set Next** and press **Select**.
   b. Enter the number of hours that the transmitter will wait before beginning the test.
4. To schedule recurring execution:
   a. Scroll to **Set Recur** and press **Select**.
   b. Enter the number of hours that will elapse between tests.
5. To disable scheduled execution:
   - To disable execution of a single scheduled test, set **Set Next** to 0.
   - To disable recurring execution, set **Set Recur** to 0.
   - To disable all scheduled execution, choose **Turn Off Sched** when you enter the Smart Meter Verification menu.

SMV flowchart: Scheduling test execution using the display

Figure 11-6: Scheduling SMV test execution using the display

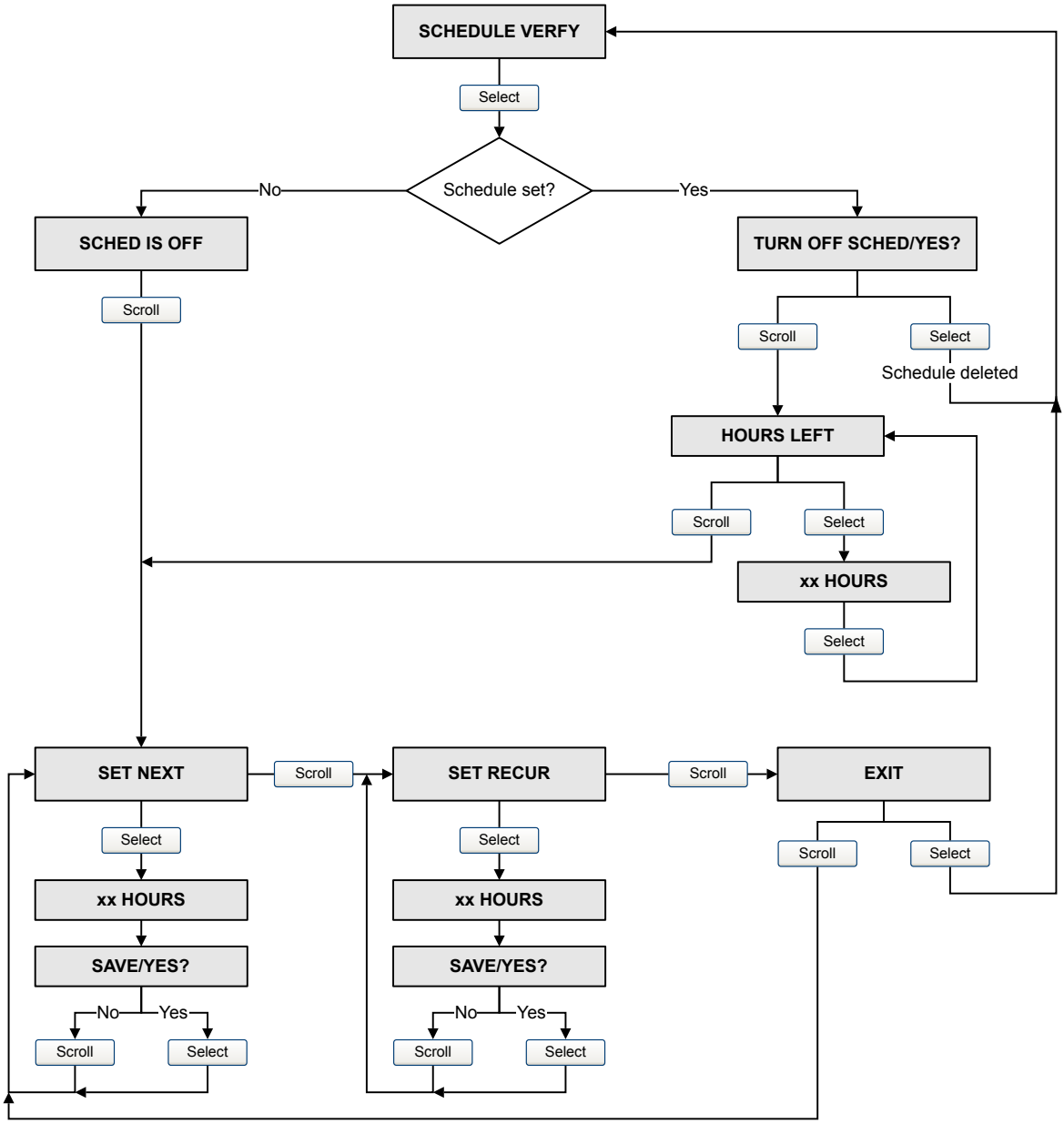

Manage scheduled test execution using ProLink III

1. Choose **Device Tools** > **Diagnostics** > **Meter Verification** > **Schedule Meter Verification**.
2. To schedule a single test or the first test in recurring execution, specify a value for **Hours Until Next Run**.

3. To schedule recurring execution, specify a value for **Hours Between Recurring Runs**.
4. To disable scheduled execution:
   - To disable execution of a single scheduled test, set **Hours Until Next Run** to 0.
   - To disable recurring execution, set **Hours Between Recurring Runs** to 0.
   - To disable all scheduled execution, click **Disable Scheduled Execution**.

Manage scheduled test execution using the Field Communicator

1. Navigate to the Smart Meter Verification menu:
   - **Overview** > **Shortcuts** > **Meter Verification**
   - **Service Tools** > **Maintenance** > **Routine Maintenance** > **Meter Verification**
2. Choose **Automatic Verification**.
3. To schedule a single test or the first test in recurring execution, specify a value for **Hrs Until Next Run**.
4. To schedule recurring execution, specify a value for **Set Recurring Hours**.
5. To disable scheduled execution:
   - To disable execution of a single scheduled test, set **Hrs Until Next Run** to 0.
   - To disable recurring execution, set **Set Recurring Hours** to 0.
   - To disable all scheduled execution, choose **Turn Off Schedule**.

11.3 Use PVR, TBR, and TMR

For detailed information about Production Volume Reconciliation (PVR), Transient Mist Remediation (TMR), and Transient Bubble Remediation (TBR), see the *Micro Motion® Oil and Gas Production Applications* manual.

Restriction

PVR, TBR, and TMR are available only with a transmitter that is ordered with one of these software options:

- An 800 Enhanced Core Processor version 4.4 and later
- HART with HART 7 enabled in order to view process variables over HART (default)

Restriction

PVR, TBR, and TMR process variables are available only over HART with HART 7 enabled (default). PVR, TBR, and TMR parameters cannot be configured with HART.

11.3.1 PVR, TBR, and TMR applications

PVR, TBR, and TMR are applications designed to provide more accurate process data in the presence of multiple phases. For example, if bubbles are present in the process fluid, or the process fluid is flashing, the volume measurements are often incorrect.

Production Volume Reconciliation (PVR)

- Provides oil and water volumes through density-based calculations for both line and reference conditions
- Detects bubble entrainment or flashing in the sensor, and can correct volumes accordingly
- Best for undersized three-phase separators that frequently have intermittent gas or water contamination in the oil leg
- Offers a simple, low-cost solution for net oil and net water measurement for two-phase separators

Transient Bubble Remediation (TBR)

- Used with single-component liquid streams that may experience intermittent low levels of gas entrainment, that is, gas carryunder
- Enables accurate measurement of a single fluid during periods of entrained gas by providing a substitute density value based on the immediately preceding process density (standard configuration)
- Tracks total time of aerated flow to assist in diagnosing process issues that may cause aeration

Transient Mist Remediation (TMR)

- Used with gas streams that may experience intermittent low levels of liquid entrainment, i.e., liquid carry-over
- Allows gas measurement to continue during periods of entrained liquid (mist) by providing a substitute flow rate value based on the immediately preceding process flow rate
- Returns to reporting the measured flow rate when the mist interval is over, increased or decreased by a maximum of 10%, until flow totals are appropriately adjusted for the unmeasured flow
- Provides an indication of the amount of time that liquid was present in the stream — identifying process improvements to reduce gas stream contamination

11.4 Piecewise linearization (PWL) for calibrating gas meters

Piecewise linearization (PWL) can linearize the measurements of flow meters for greater accuracy in order to measure gas over a wide range of flow rates. PWL does not apply when measuring liquid flow. When better accuracy is required over the published gas measurement specifications, an Emerson-approved independent gas laboratory can calibrate gas up to 10 PWL adjustment points.

PWL configuration and calibration information is not available through HART.

For more information, see the white paper, *The Practical Application of Multi-Point Piecewise Linear Interpolation (PWL) and Other Developing Trends with Coriolis Meters for Natural Gas Custody Transfer Applications*, available at *www.emerson.com*.

The PWL feature is available in ProLink III, so you can view the points that are stored and capture them in the uploaded and downloaded configuration files.

11.5 Use the fuel consumption application

For detailed information about fuel consumption, see the *Micro Motion® Fuel Consumption Application for Transmitters Installation and Operation Guide*.

Restriction

Fuel consumption process variables are available only over HART with HART 7 enabled (default). Fuel consumption parameters cannot be configured with HART.

11.5.1 Fuel consumption application architecture

The Fuel consumption application is designed to support fuel efficiency and fuel management projects and practices by providing accurate real-time fuel consumption data.

- Automatically calculates the fluid consumption between two Coriolis flow sensors, typically for recirculating fuel consumption loops
- Eliminates the need to program an external calculation system and minimizes common inaccuracies related to time lag, sampling issues and cumulative errors
- Uses a proprietary algorithm that adapts to the unique calibration of each pair of Coriolis flow sensors

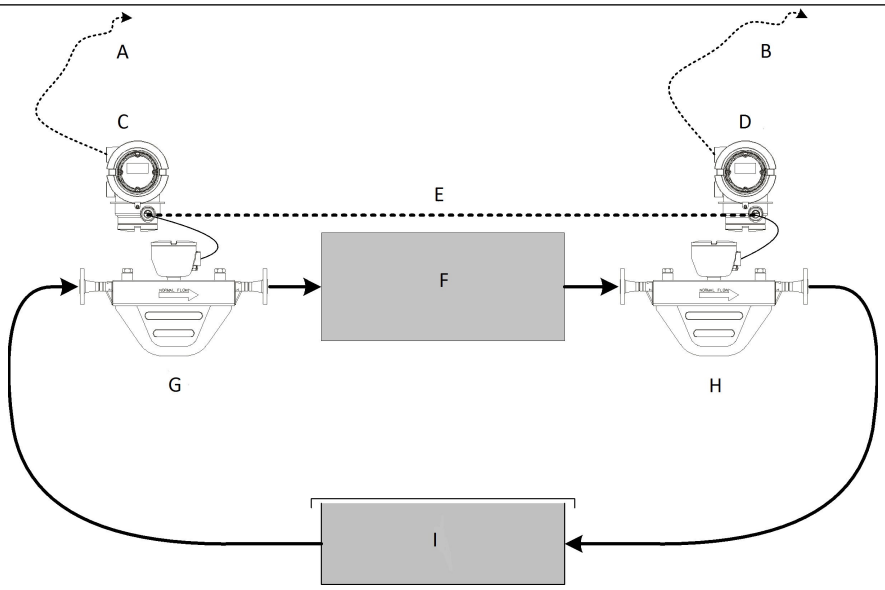

A. Standard process variables
B. Standard and differential process variables
C. Supply transmitter
D. Return transmitter
E. HART cable
F. Engine
G. Supply sensor
H. Return sensor
I. Storage tank

11.6 Zero the meter

Zeroing the meter establishes a baseline for process measurement by analyzing the sensor's output when there is no flow through the sensor tubes.

Prerequisites

Verify the zero and prepare the meter using the procedures in *Section 2.5*.

Procedure

Zero the meter.

Tool	Path
Display	**OFFLINE MAINT** > **ZERO** > **CAL ZERO** > **CAL/YES?** To restore the zero value set at the factory: **OFFLINE MAINT** > **ZERO** > **RESTORE ZERO** > **RESTORE/YES?** This function requires the enhanced core processor.
ProLink III	**Device Tools** > **Calibration** > **Zero Verification and Calibration** > **Calibrate Zero**

Tool	Path
Field Communicator	Service Tools > Maintenance > Zero Calibration > Perform Auto Zero

If necessary, modify Zero Time. Zero Time controls the amount of time the transmitter takes to determine its zero-flow reference point. The default Zero Time is 20 seconds. For most applications, the default Zero Time is appropriate.

Postrequisites

Restore normal flow through the sensor by opening the valves. Verify that the sensor tubes are full.

Need help? If the zero fails:

- Verify that there is no flow through the sensor, then retry.
- Remove or reduce sources of electromechanical noise, then retry.
- Set Zero Time to a lower value, then retry.
- If the zero continues to fail, contact customer service.

11.7 Validate the meter

Display	OFF-LINE MAINT > CONFG > UNITS > MTR F
ProLink III	Device Tools > Configuration > Process Measurement > Flow Device Tools > Configuration > Process Measurement > Density
Field Communicator	Configure > Manual Setup > Measurements > Flow Configure > Manual Setup > Measurements > Density

Overview

Meter validation compares flowmeter measurements reported by the transmitter to an external measurement standard. If the transmitter value for mass flow, volume flow, or density measurement is significantly different from the external measurement standard, you may want to adjust the corresponding meter factor. The flowmeter's actual measurement is multiplied by the meter factor, and the resulting value is reported and used in further processing.

Prerequisites

Identify the meter factor(s) that you will calculate and set. You may set any combination of the three meter factors: mass flow, volume flow, and density. Note that all three meter factors are independent:

- The meter factor for mass flow affects only the value reported for mass flow.
- The meter factor for density affects only the value reported for density.
- The meter factor for volume flow affects only the value reported for volume flow or gas standard volume flow.

Important

To adjust volume flow, you must set the meter factor for volume flow. Setting a meter factor for mass flow and a meter factor for density will not produce the desired result. The volume flow calculations are based on original mass flow and density values, before the corresponding meter factors have been applied.

If you plan to calculate the meter factor for volume flow, be aware that validating volume in the field may be expensive, and the procedure may be hazardous for some process fluids. Therefore, because volume is inversely proportional to density, an alternative to direct measurement is to calculate the meter factor for volume flow from the meter factor for density. See *Section 11.7.1* for instructions on this method.

Obtain a reference device (external measurement device) for the appropriate process variable.

Important

For good results, the reference device must be highly accurate.

Procedure

1. Determine the meter factor as follows:
   a. Set the meter factor to 1 to take a sample measurement.
   b. Measure the same sample using the reference device.
   c. Calculate the meter factor using the following formula:

$$\text{NewMeterFactor} = \text{ConfiguredMeterFactor} \times \left(\frac{\text{ReferenceMeasurement}}{\text{FlowmeterMeasurement}} \right)$$

2. Ensure that the calculated meter factor does not fall outside 0.98 and 1.02. If the meter factor is outside these limits, contact customer service.
3. Configure the meter factor in the transmitter.

Example: Calculating the meter factor for mass flow

The flowmeter is installed and validated for the first time. The mass flow measurement from the transmitter is 250.27 lb. The mass flow measurement from the reference device is 250 lb. The mass flow meter factor is calculated as follows:

$$\text{MeterFactor}_{\text{MassFlow}} = 1 \times \left(\frac{250}{250.27} \right) = 0.9989$$

The first meter factor for mass flow is 0.9989.

One year later, the flowmeter is validated again. The mass flow measurement from the transmitter is 250.07 lb. The mass flow measurement from the reference device is 250.25 lb. The new mass flow meter factor is calculated as follows:

$$\text{MeterFactor}_{\text{MassFlow}} = 0.9989 \times \left(\frac{250.25}{250.07} \right) = 0.9996$$

The new meter factor for mass flow is 0.9996.

11.7.1 Alternate method for calculating the meter factor for volume flow

The alternate method for calculating the meter factor for volume flow is used to avoid the difficulties that may be associated with the standard method.

This alternate method is based on the fact that volume is inversely proportional to density. It provides partial correction of the volume flow measurement by adjusting for the portion of the total offset that is caused by the density measurement offset. Use this method only when a volume flow reference is not available, but a density reference is available.

Procedure

1. Calculate the meter factor for density, using the standard method (see *Section 11.7*).
2. Calculate the meter factor for volume flow from the meter factor for density:

$$\text{MeterFactor}_{\text{Volume}} = \left(\frac{1}{\text{MeterFactor}_{\text{Density}}} \right)$$

Note

The following equation is mathematically equivalent to the first equation. You may use whichever version you prefer.

$$\text{MeterFactor}_{\text{Volume}} = \text{ConfiguredMeterFactor}_{\text{Density}} \times \left(\frac{\text{Density}_{\text{Flowmeter}}}{\text{Density}_{\text{Reference Device}}} \right)$$

3. Ensure that the calculated meter factor does not fall outside 0.98 and 1.02. If the meter factor is outside these limits, contact customer service.
4. Configure the meter factor for volume flow in the transmitter.

11.8 Perform a (standard) D1 and D2 density calibration

Density calibration establishes the relationship between the density of the calibration fluids and the signal produced at the sensor. Density calibration includes the calibration of the D1 (low-density) and D2 (high-density) calibration points.

Important

Micro Motion flowmeters are calibrated at the factory, and normally do not need to be calibrated in the field. Calibrate the flowmeter only if you must do so to meet regulatory requirements. Contact customer support before calibrating the flowmeter.

Tip

Use meter validation and meter factors, rather than calibration, to prove the meter against a regulatory standard or to correct measurement error.

Prerequisites

- During density calibration, the sensor must be completely filled with the calibration fluid, and flow through the sensor must be at the lowest rate allowed by your application. This is usually accomplished by closing the shutoff valve downstream from the sensor, then filling the sensor with the appropriate fluid.
- D1 and D2 density calibration require a D1 (low-density) fluid and a D2 (high-density) fluid. You may use air and water.
- If **LD Optimization** is enabled on your meter, disable it. To do this, choose **Configure** > **Manual Setup** > **Measurements** > **LD Optimization**. **LD Optimization** is used only with large sensors in hydrocarbon applications. In some installations, only customer service has access to this parameter. If this is the case, contact customer service before continuing.
- The calibrations must be performed without interruption, in the order shown. Make sure that you are prepared to complete the process without interruption.
- Before performing the calibration, record your current calibration parameters. You can do this by saving the current configuration to a file on the PC. If the calibration fails, restore the known values.

Restriction

For T-Series sensors, the D1 calibration must be performed on air and the D2 calibration must be performed on water.

11.8.1 Perform a D1 and D2 density calibration using ProLink III

1. Read the Prerequisites on *page 177* if you have not already done so.
2. See the following figure.

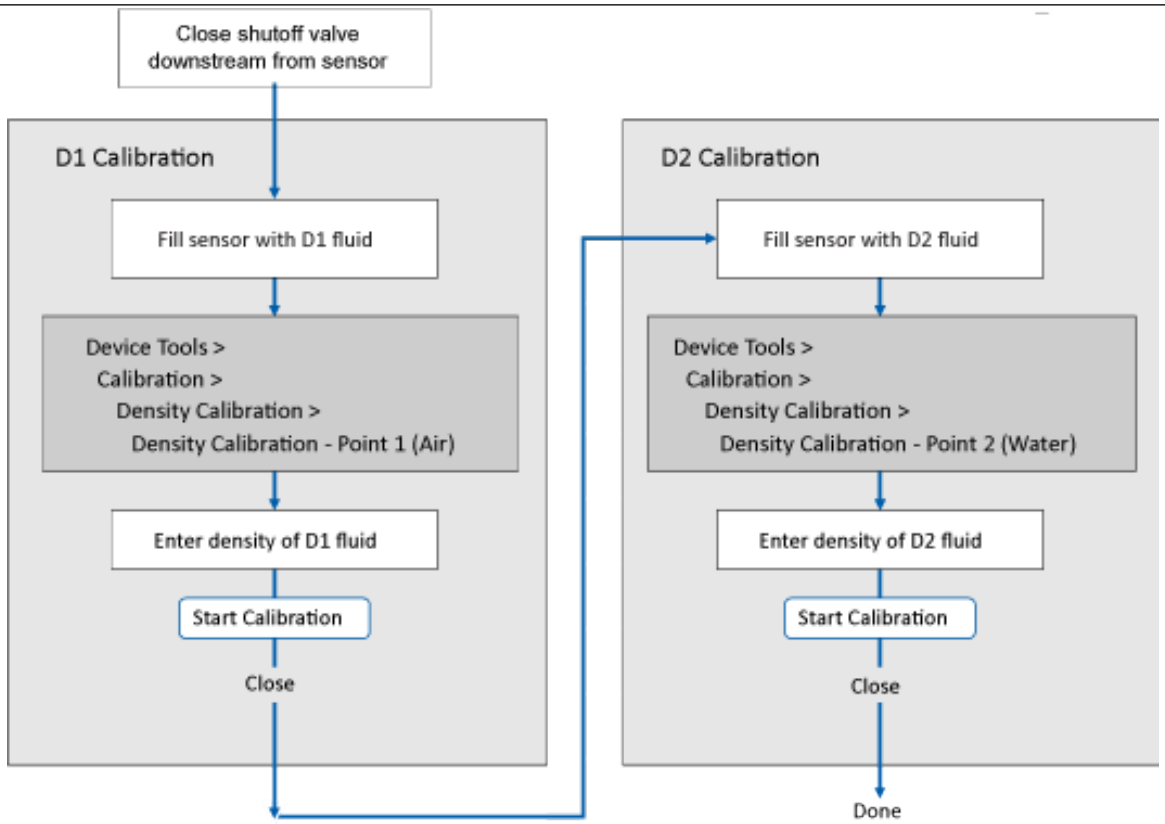

Postrequisites

If you disabled **LD Optimization** before the calibration procedure, re-enable it.

11.8.2 Perform a D1 and D2 density calibration using the Field Communicator

1. Read the Prerequistes on *page 177* if you have not already done so.
2. See the following figure.

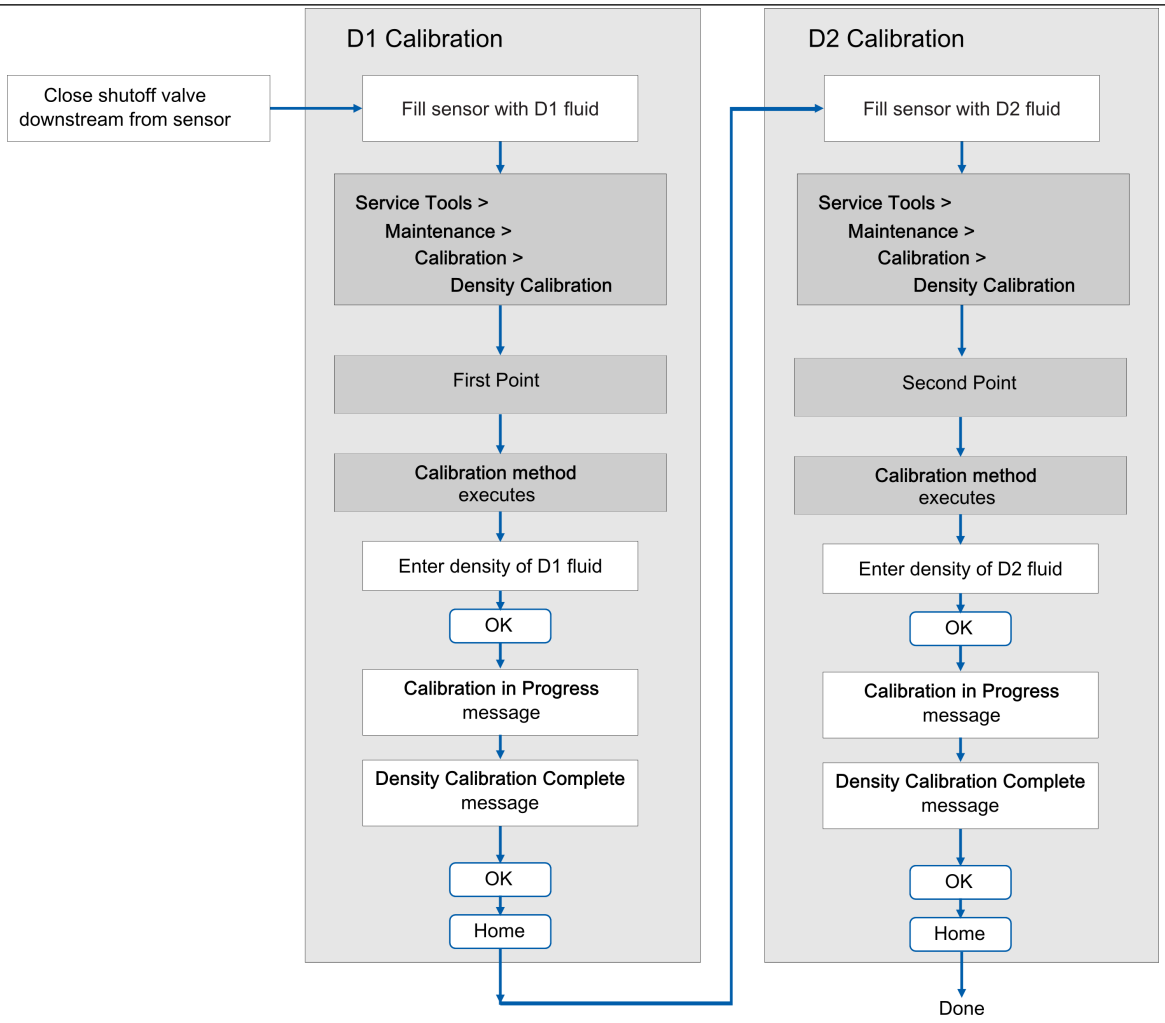

Postrequisites

If you disabled **LD Optimization** before the calibration procedure, re-enable it.

11.9 Perform a D3 and D4 density calibration (T-Series sensors only)

For T-Series sensors, the optional D3 and D4 calibration could improve the accuracy of the density measurement if the density of your process fluid is less than 0.8 g/cm^3 or greater than 1.2 g/cm^3 .

If you perform the D3 and D4 calibration, note the following:

- Do not perform the D1 and D2 calibration.
- Perform the D3 calibration if you have one calibrated fluid.

- Perform both the D3 and D4 calibrations if you have two calibrated fluids (other than air and water). The calibrations must be performed without interruption, in the order shown. Make sure that you are prepared to complete the process without interruption.

Prerequisites

- During density calibration, the sensor must be completely filled with the calibration fluid, and flow through the sensor must be at the lowest rate allowed by your application. This is usually accomplished by closing the shutoff valve downstream from the sensor, then filling the sensor with the appropriate fluid.
- For D3 density calibration, the D3 fluid must meet the following requirements:
  - Minimum density of 0.6 g/cm^3
  - Minimum difference of 0.1 g/cm^3 between the density of the D3 fluid and the density of water. The density of the D3 fluid may be either greater or less than the density of water.
- For D4 density calibration, the D4 fluid must meet the following requirements:
  - Minimum density of 0.6 g/cm^3
  - Minimum difference of 0.1 g/cm^3 between the density of the D4 fluid and the density of the D3 fluid. The density of the D4 fluid must be greater than the density of the D3 fluid.
  - Minimum difference of 0.1 g/cm^3 between the density of the D4 fluid and the density of water. The density of the D4 fluid may be either greater or less than the density of water.
- Before performing the calibration, record your current calibration parameters. You can do this by saving the current configuration to a file on the PC. If the calibration fails, restore the known values.

11.9.1 Perform a D3 or D3 and D4 density calibration using ProLink III

See *Figure 11-7*.

Figure 11-7: D3 or D3 and D4 density calibration using ProLink III

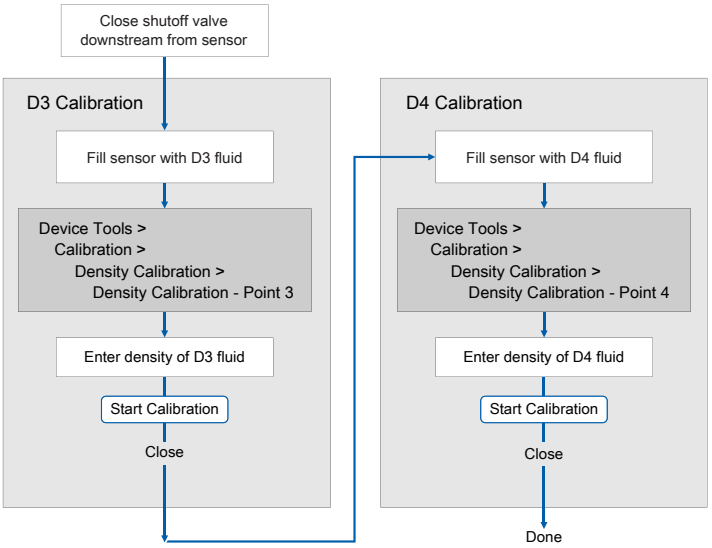

11.9.2 Perform a D3 or D3 and D4 density calibration using the Field Communicator

See the following flowchart.

Figure 11-8: D3 or D3 and D4 density calibration using the Field Communicator

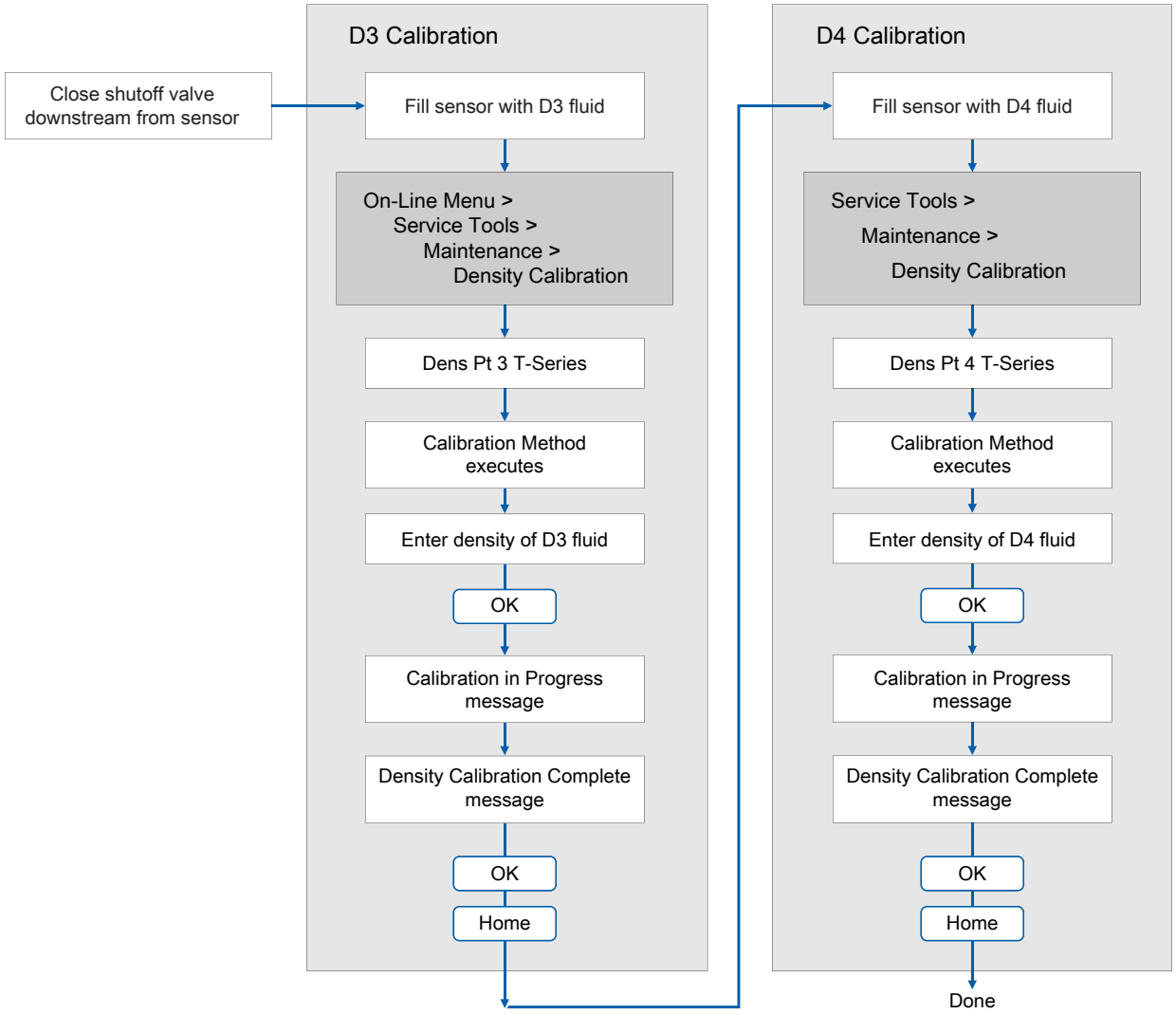

11.10 Perform temperature calibration

Temperature calibration establishes the relationship between the temperature of the calibration fluids and the signal produced by the sensor.

Prerequisites

The temperature calibration is a two-part procedure: temperature offset calibration and temperature slope calibration. The two parts must be performed without interruption, in the order shown. Ensure that you are prepared to complete the process without interruption. You will need a low-temperature calibration fluid and a high-temperature calibration fluid. You will not see the effect of the calibration until both the temperature offset calibration and the temperature slope calibration are complete.

Important

Consult customer support before performing a temperature calibration. Under normal circumstances, the temperature circuit is stable and should not need an adjustment.

11.10.1 Perform temperature calibration using the display

1. Fill the sensor with the low-temperature fluid.
2. Wait until the sensor achieves thermal equilibrium.
3. Navigate to the calibration menu and enter it.
   a. Activate **Scroll** and **Select** simultaneously.
   b. Scroll to **OFF-LINE MAINT**and activate **Select**.
   c. Scroll to **OFF-LINE CAL** and activate **Select**.
   d. Scroll to **CAL TEMP** and activate **Select**.
4. Enter the temperature of the low-temperature fluid.
   a. When **CAL OFFSET TEMP** is flashing, activate **Select**.
   b. Enter the temperature value and save it.
5. Fill the sensor with the high-temperature fluid.
6. Wait until the sensor achieves thermal equilibrium.
7. Enter the temperature of the high-temperature fluid.
   a. When **CAL SLOPE TEMP** is flashing, activate **Select**.
   b. Enter the temperature value and save it.
8. Activate **Scroll** to view the new offset and slope values.
9. Activate **Select** to exit.

11.10.2 Perform temperature calibration using ProLink III

See the following figure.

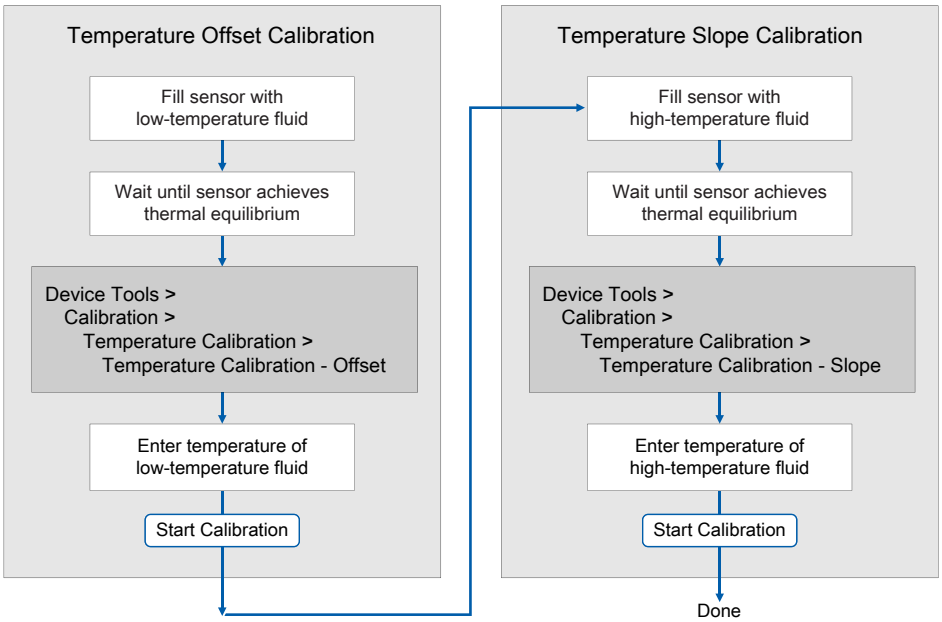
Temperature Offset Calibration
Fill sensor with low-temperature fluid
Wait until sensor achieves thermal equilibrium
Device Tools > Calibration > Temperature Calibration > Temperature Calibration - Offset
Enter temperature of low-temperature fluid
Start Calibration
Temperature Slope Calibration
Fill sensor with high-temperature fluid
Wait until sensor achieves thermal equilibrium
Device Tools > Calibration > Temperature Calibration > Temperature Calibration - Slope
Enter temperature of high-temperature fluid
Start Calibration
Done

11.10.3 Perform temperature calibration using the Field Communicator

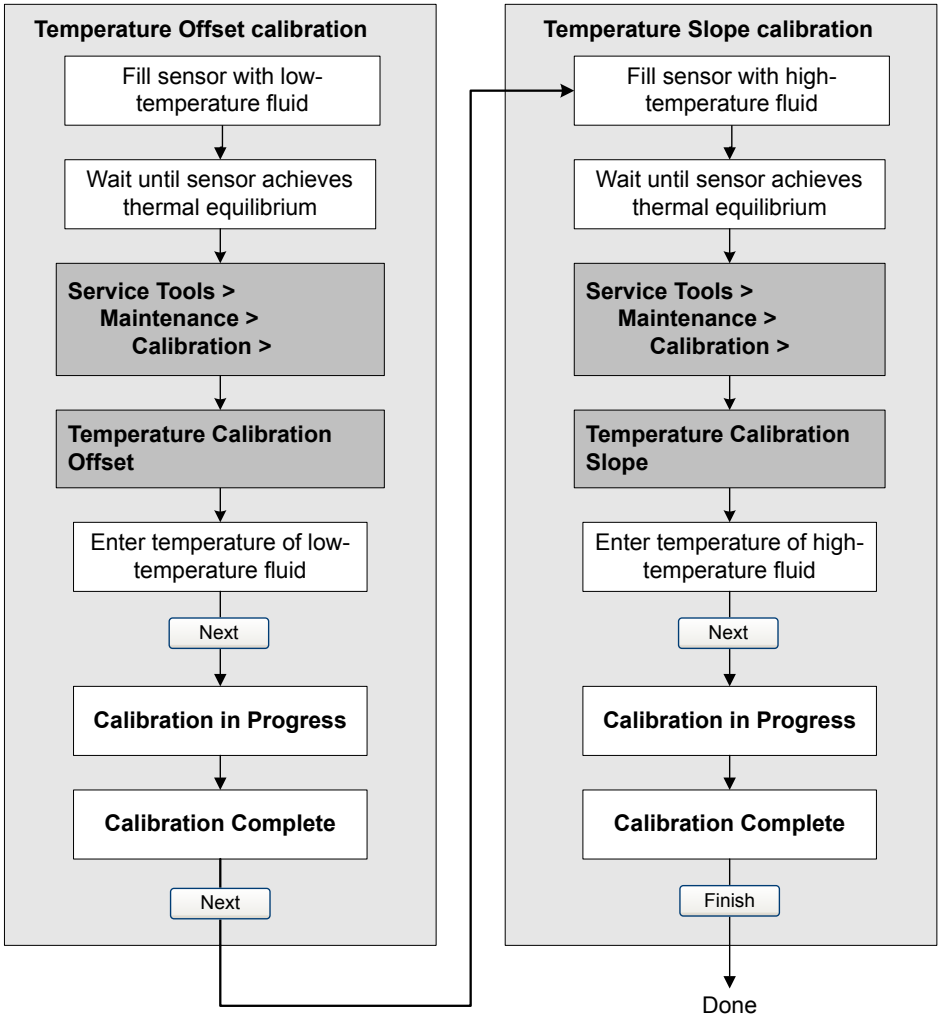

12 Troubleshooting

Topics covered in this chapter:

- *Status LED states*
- *Status alerts, causes, and recommendations*
- *Locate a device using the HART 7 Squawk feature*
- *Flow measurement problems*
- *Density measurement problems*
- *Temperature measurement problems*
- *Milliamp output problems*
- *Frequency Output problems*
- *Discrete output problems*
- *Discrete Input problems*
- *Using sensor simulation for troubleshooting*
- *Check power supply wiring*
- *Check sensor-to-transmitter wiring*
- *Check grounding*
- *Perform loop tests*
- *Trim mA output*
- *Check the HART communication loop*
- *Check HART Address and mA Output Action*
- *Check HART burst mode*
- *Check Lower Range Value and Upper Range Value*
- *Check mA Output Fault Action*
- *Check for radio frequency interference (RFI)*
- *Check Frequency Output Mode*
- *Check Frequency Output Scaling Method*
- *Check Frequency Output Fault Action*
- *Check Flow Direction*
- *Check the cutoffs*
- *Check for two-phase flow (slug flow)*
- *Check the drive gain*
- *Check the pickoff voltage*
- *Check for internal electrical problems*
- *Check the core processor LED*

- *Perform a 700 core processor resistance test*

12.1 Status LED states

The status LED on the transmitter indicates whether or not alerts are active. If alerts are active, view the alert list to identify the alerts, then take appropriate action to correct the alert condition.

Your transmitter has a status LED only if it has a display.

If the transmitter has a display and **LED Blinking** is disabled, the status LED does not flash to indicate an unacknowledged alert.

Table 12-1: Transmitter status reported by status LED

LED state	Description	Recommendation
Solid green	No alerts are active.	Continue with configuration or process measurement.
Flashing green (if enabled)	Unacknowledged corrected condition (no alert)	Continue with configuration or process measurement. Acknowledge the alert if you choose.
Solid yellow	One or more low-severity alerts are active.	A low-severity alert condition does not affect measurement accuracy or output behavior. You can continue with configuration or process measurement, but Micro Motion still recommends identifying and resolving the alert condition.
Flashing yellow (if enabled)	Calibration in progress, or Known Density Verification in progress. One or more low-severity alerts are active and have not been acknowledged.	A low-severity alert condition does not affect measurement accuracy or output behavior. You can continue with configuration or process measurement, but Micro Motion still recommends identifying and resolving the alert condition.
Solid red	One or more high-severity alerts are active.	A high-severity alert condition affects measurement accuracy and output behavior. Resolve the alert condition before continuing.
Flashing red (if enabled)	One or more high-severity alerts are active and have not been acknowledged.	A high-severity alert condition affects measurement accuracy and output behavior. Resolve the alert condition before continuing. Acknowledge the alert if you choose.

12.2 Status alerts, causes, and recommendations

Alert number	Alert title	Possible cause	Recommended actions
A001	EEPROM Error (Core Processor)	The core processor has experienced a memory error.	• Cycle power to the meter. • Replace the core processor. • Contact customer support.
A002	RAM Error (Core Processor)	The core processor has experienced a memory error.	• Cycle power to the meter. • Replace the core processor. • Contact customer support.
A003	No Sensor Response	The transmitter is not receiving one or more basic electrical signals from the sensor. This alert often occurs in conjunction with Alert 102.	• Check the drive gain and the pickoff voltage. • Check the wiring between the sensor and the transmitter. • Verify that internal wiring is secure and that there are no internal electrical problems. • Check the integrity of the sensor tubes. • Perform sensor coil resistance checks.
A004	Temperature Overrange	The RTD resistance is out of range for the sensor. The tube RTD resistance is out of range for the sensor.	• Check your process conditions against the values reported by the device. • Verify temperature characterization or calibration parameters. • Verify that internal wiring is secure and that there are no internal electrical problems. • Check the wiring between the sensor and the transmitter. • Contact customer support.
A005	Mass Flow Rate Overrange	The measured flow rate is greater than the maximum flow rate of the sensor (ΔT greater than 200 μs).	• If other alerts are present, resolve those alert conditions first. If the current alert persists, continue with the recommended actions. • Check your process conditions against the values reported by the device. • Check for two-phase flow.

Alert number	Alert title	Possible cause	Recommended actions
A006	Characterization Required	Calibration factors have not been entered, or the sensor type is incorrect, or the calibration factors are incorrect for the sensor type.	• Verify all of the characterization or calibration parameters. See the sensor tag or the calibration sheet for your meter. • Verify the setting of the **Sensor Type** parameter. • If **Sensor Type**=Curved Tube, ensure that no parameters specific to Straight Tube have been set. • Verify that internal wiring is secure and that there are no internal electrical problems. • Replace the core processor. • Contact customer support.
A008	Density Overrange	The line density is greater than 10 g/cm^3 (10000 kg/m^3).	• If other alerts are present, resolve those alert conditions first. If the current alert persists, continue with the recommended actions. • Check for air in the flow tubes, tubes not filled, foreign material in the tubes, coating in the tubes, or other process problems. • Check for two-phase flow. • Verify all of the characterization or calibration parameters. See the sensor tag or the calibration sheet for your meter. • Check the drive gain and the pickoff voltage. • Perform density calibration. • Contact customer support.

Alert number	Alert title	Possible cause	Recommended actions
A009	Transmitter Initializing/Warming Up	Transmitter is in power-up mode. This alert often occurs in conjunction with Alerts 14 and 26.	• Allow the meter to complete its power-up sequence. The alert should clear automatically. • If other alerts are present, resolve those alert conditions first. If the current alert persists, continue with the recommended actions. • Verify that the tubes are full of process fluid. • Check the wiring between the sensor and the transmitter. • Verify that the transmitter is receiving sufficient power. - If it is not, correct the problem and cycle power to the meter. - If it is, this suggests that the transmitter has an internal power issue. Replace the transmitter. • Ensure that the process fluid is stable. Check for two-phase flow, high process noise, or a fast transition between two fluids of different densities.
A010	Calibration Failure	Many possible causes. This alert will not clear until you cycle power to the meter.	• Ensure that your calibration procedure meets the documented requirements, cycle power to the meter, then retry the procedure. • If this alert appears during zeroing, verify that there is no flow through the sensor, cycle power to the meter, then retry the procedure.
A011	Zero Calibration Failed: Low	Many possible causes, such as too much flow, especially reverse flow, through the sensor during a calibration procedure, or a zero result that is too low. This alert is accompanied by A010. This alert will not clear until you cycle power to the meter.	• Verify that there is no flow through the sensor, cycle power to the meter, then retry the procedure.
A012	Zero Calibration Failed: High	Many possible causes, such as too much flow, especially forward flow, through the sensor during a calibration procedure, or a zero result that is too high. This alert is accompanied by A010. This alert will not clear until you cycle power to the meter.	• Verify that there is no flow through the sensor, cycle power to the meter, then retry the procedure.

Alert number	Alert title	Possible cause	Recommended actions
A013	Zero Calibration Failed: Unstable	There was too much process instability during the calibration procedure. This alert will not clear until you cycle power to the meter.	• Remove or reduce sources of electromechanical noise (e.g., pumps, vibration, pipe stress), cycle power to the meter, then retry the procedure.
A014	Transmitter Failure	Many possible causes. This alert often occurs in conjunction with alerts A9 and A26.	• Ensure that all wiring compartment covers are installed correctly. • Ensure that all transmitter wiring meets specifications and that all cable shields are properly terminated. • Check the grounding of all components. • Evaluate the environment for sources of high electromagnetic interference (EMI) and relocate the transmitter or wiring as necessary. • Contact customer support.
A016	Sensor Temperature (RTD) Failure	The value computed for the resistance of the line RTD is outside limits.	• Check your process conditions against the values reported by the device. • Check the wiring between the sensor and the transmitter. • Verify that internal wiring is secure and that there are no internal electrical problems. • Contact customer support.
A017	Sensor Case Temperature (RTD) Failure	The values computed for the resistance of the meter and case RTDs are outside limits.	• Check your process conditions against the values reported by the device. Temperature should be between –200 °F and +400 °F. • Verify all of the characterization or calibration parameters. See the sensor tag or the calibration sheet for your meter. • Check the wiring between the sensor and the transmitter. • Verify that internal wiring is secure and that there are no internal electrical problems. • Contact customer support.

Alert number	Alert title	Possible cause	Recommended actions
A018	EEPROM Error (Transmitter)	The transmitter has experienced a memory error. This alert will not clear until you cycle power to the meter.	• Ensure that all wiring compartment covers are installed correctly. • Ensure that all transmitter wiring meets specifications and that all cable shields are properly terminated. • Check the grounding of all components. • Evaluate the environment for sources of high electromagnetic interference (EMI) and relocate the transmitter or wiring as necessary. • Cycle power to the meter. • If the alert persists, replace the transmitter. • Contact customer support.
A019	RAM Error (Transmitter)	The transmitter has experienced a memory error. This alert will not clear until you cycle power to the meter.	• Ensure that all wiring compartment covers are installed correctly. • Ensure that all transmitter wiring meets specifications and that all cable shields are properly terminated. • Check the grounding of all components. • Evaluate the environment for sources of high electromagnetic interference (EMI) and relocate the transmitter or wiring as necessary. • Cycle power to the meter. • If the alert persists, replace the transmitter. • Contact customer support.
A020	Calibration Factors Missing	Some calibration factors have not been entered or are incorrect.	• Verify all of the characterization or calibration parameters. See the sensor tag or the calibration sheet for your meter. • Verify the setting of the **Sensor Type** parameter. • If **Sensor Type**=Curved Tube, ensure that no parameters specific to Straight Tube have been set.

Alert number	Alert title	Possible cause	Recommended actions
A021	Transmitter/Sensor/ Software Mismatch	The configured board type does not match the physical board, or the configured sensor type does not match the physical sensor.	• Verify all of the characterization or calibration parameters. See the sensor tag or the calibration sheet for your meter. • Ensure that the correct board is installed. • Verify the setting of the **Sensor Type** parameter. • If **Sensor Type**=Curved Tube, ensure that no parameters specific to Straight Tube have been set.
A022	Configuration Database Corrupt (Core Processor)	Internal electronics failure.	• Cycle power to the meter. • Contact customer support.
A023	Internal Totals Corrupt (Core Processor)	Internal electronics failure.	• Cycle power to the meter. • Contact customer support.
A024	Program Corrupt (Core Processor)	Internal electronics failure.	• Cycle power to the meter. • Contact customer support.
A025	Boot Sector Fault (Core Processor)	Internal electronics failure.	• Cycle power to the meter. • Contact customer support.
A026	Sensor/Transmitter Communications Failure	The transmitter has lost communication with the core processor. There may be a problem with the wiring or with either component. This alert often occurs in conjunction with alerts A9 and A14.	• Check the wiring between the sensor and the transmitter. • Check for noise in the wiring or in the transmitter environment. • Verify that internal wiring is secure and that there are no internal electrical problems. • Check the status LED on the core processor. • Check the resistance across core processor terminals. • If the alert persists: - Replace the core processor. - If that does not solve the problem, restore the original core processor and replace the transmitter. - If that does not solve the problem, replace both the transmitter and the core processor.

Alert number	Alert title	Possible cause	Recommended actions
A027	Security Breach	The transmitter has been switched from secure mode to unsecure mode. In unsecured mode, the transmitter configuration can be changed. The HART device ID is set to zero.	• Check the HART device ID. For custody transfer or MID applications, it must be non-zero. If it is set to 0, contact the factory. • Set the transmitter to *secure* to clear the alert. Note that additional procedures may be required to return the device to secured mode. • If the HART device ID is set to zero, enter any nonzero value using ProLink III. For example, enter the transmitter serial number.
A028	Core Processor Write Failure	Internal electronics failure.	• Cycle power to the meter. • Contact customer support.
A029	Internal Electronics Failure	This can indicate a loss of communication between the transmitter and the display module.	• Cycle power to the meter. • Replace the display module. • Contact customer support.
A030	Incorrect Board Type	The loaded software is not compatible with the programmed board type.	• Contact customer support.
A031	Low Power	The core processor or transmitter is not receiving enough power. This alert will not clear until you cycle power to the meter.	• Check the wiring between the transmitter and the core processor, then cycle power to the meter. • Check the wiring of the transmitter, then cycle power to the meter. • Verify that the transmitter is receiving sufficient power. - If it is not, correct the problem and cycle power to the meter. - If it is, this suggests that the transmitter has an internal power issue. Replace the transmitter.
A032	Meter Verification in Progress: Outputs to Fault	A meter verification test is in progress, with outputs set to Fault.	• Allow the procedure to complete.

Alert number	Alert title	Possible cause	Recommended actions
A033	Insufficient Pickoff Signal	The signal from the sensor pickoff(s) is insufficient. This suggests that the sensor tubes or vibrating elements are not vibrating. This alert often occurs in conjunction with Alert 102.	• Check for air in the flow tubes, tubes not filled, foreign material in the tubes, coating in the tubes, or other process problems. • Check for foreign material in the process gas or fluid, coating, or other process problems. • Check for fluid separation by monitoring the density value and comparing the results against expected density values. • Ensure that the sensor orientation is appropriate for your application. Settling from a two-phase or three-phase fluid can cause this alert even if the flow tubes are full.
A035	Meter Verification Aborted	The meter verification test did not complete, possibly because of a manual abort.	• Verify that process conditions are stable, then retry the test. • Contact customer support.
A100	mA Output 1 Saturated	The calculated mA Output value is outside the configured range.	• Check the settings of **Upper Range Value** and **Lower Range Value**. • Check process conditions. Actual conditions may be outside the normal conditions for which the output is configured. • Check for air in the flow tubes, tubes not filled, foreign material in the tubes, coating in the tubes, or other process problems. • Verify that the measurement units are configured correctly for your application. • Purge the sensor tubes.
A101	mA Output 1 Fixed	The HART address is set to a non-zero value, or the mA Output is configured to send a constant value.	• Check whether the output is in loop test mode. If it is, unfix the output. • Exit mA Output trim, if applicable. • Check the HART address. If the HART address is non-zero, you may need to change the setting of **mA Output Action**. • Check whether the output has been set to a constant value via digital communication.

Alert number	Alert title	Possible cause	Recommended actions
A102	Drive Overrange	The drive power (current/voltage) is at its maximum.	• Check the drive gain and the pickoff voltage. • Check the wiring between the sensor and the transmitter. • Verify that internal wiring is secure and that there are no internal electrical problems. • Check for air in the flow tubes, tubes not filled, foreign material in the tubes, coating in the tubes, or other process problems. • Check for fluid separation by monitoring the density value and comparing the results against expected density values. • Ensure that the sensor orientation is appropriate for your application. Settling from a two-phase or three-phase fluid can cause this alert even if the flow tubes are full.
A103	Data Loss Possible (Totals and Inventories)	Totalizers are not properly saved. The device was unable to store the totalizers during the last power-down, and must rely on the saved totals. The saved totals can be as much as two hours out of date.	• Check the wiring between the transmitter and the core processor, then cycle power to the meter. • Verify that the transmitter is receiving sufficient power. - If it is not, correct the problem and cycle power to the meter. - If it is, this suggests that the transmitter has an internal power issue. Replace the transmitter.
A104	Calibration in Progress	A calibration procedure is in process.	• Allow the procedure to complete. • For zero calibration, you may abort the calibration, set **Zero Time** to a lower value, and restart the calibration.
A105	Two-Phase Flow	The line density is outside the user-defined two-phase flow limits.	• Check for two-phase flow. • Check the live density reading against the upper and lower two-phase flow limit settings.
A106	Burst Mode Enabled	HART burst mode is enabled.	• No action required. • If desired, you can set **Alert Severity Level** to Ignore.
A107	Power Reset Occurred	The transmitter has been restarted.	• No action required. • If desired, you can set **Alert Severity Level** to Ignore.

Alert number	Alert title	Possible cause	Recommended actions
A108	Basic Event 1 On	The process has triggered Basic Event 1.	• No action required. • Review event configuration if you believe the event was triggered erroneously.
A109	Basic Event 2 On	The process has triggered Basic Event 2.	• No action required. • Review event configuration if you believe the event was triggered erroneously.
A110	Frequency Output Saturated	The calculated Frequency Output is outside the configured range.	• Check the Frequency Output scaling. • Check process conditions. Actual conditions may be outside the normal conditions for which the output is configured. • Check for air in the flow tubes, tubes not filled, foreign material in the tubes, coating in the tubes, or other process problems. • Verify that the measurement units are configured correctly for your application. • Purge the sensor tubes.
A111	Frequency Output Fixed	The Frequency Output has been configured to send a constant value.	• Cycling power to the meter or restarting totalizers will restore the Frequency Output to normal operation. • Check whether the output is in loop test mode. If it is, unfix the output. • Check whether the output has been set to a constant value via digital communication.
A112	Upgrade Transmitter Software	The transmitter software is downlevel from the core processor software.	• Contact customer support.
A113	mA Output 2 Saturated	The calculated mA Output value is outside the configured range.	• Check the settings of **Upper Range Value** and **Lower Range Value**. • Check process conditions. Actual conditions may be outside the normal conditions for which the output is configured. • Check for air in the flow tubes, tubes not filled, foreign material in the tubes, coating in the tubes, or other process problems. • Verify that the measurement units are configured correctly for your application. • Purge the sensor tubes.

Alert number	Alert title	Possible cause	Recommended actions
A115	No External Input or Polled Data	The connection to an external measurement device has failed. No external data is available.	• Verify that the external device is operating correctly. • Verify the wiring between the transmitter and the external device. • Verify the HART polling configuration.
A116	Temperature Overrange (Petroleum)	The measured temperature is outside the range of the API table.	• Check your process conditions against the values reported by the device. • Verify the configuration of the petroleum measurement application and related parameters. • Verify the configuration of the API referral application and related parameters.
A117	Density Overrange (Petroleum)	The measured density is outside the range of the API table.	• Check your process conditions against the values reported by the device. • Verify the configuration of the petroleum measurement application and related parameters. • Verify the configuration of the API referral application and related parameters.
A118	Discrete Output 1 Fixed	The Discrete Output has been configured to send a constant value.	• Check whether the output is in loop test mode. If it is, unfix the output.
A120	Curve Fit Failure (Concentration)	The transmitter was unable to calculate a valid concentration matrix from the current data.	• Verify the configuration of the concentration measurement application.
A121	Extrapolation Alert (Concentration)	The line density or line temperature is outside the range of the concentration matrix plus the configured extrapolation limit.	• Check your process conditions against the values reported by the device. • Verify the configuration of the concentration measurement application.
A131	Meter Verification in Progress: Outputs to Last Measured Value	A meter verification test is in progress, with outputs set to Last Measured Value.	• Allow the procedure to complete.
A132	Sensor Simulation Active	Sensor simulation is enabled.	• Disable sensor simulation.
N/A	Density FD Calibration in Progress	A flowing density calibration is in progress.	• No action required.
N/A	Density D1 Calibration in Progress	A D1 density calibration is in progress.	• No action required.
N/A	Density D2 Calibration in Progress	A D2 density calibration is in progress.	• No action required.
N/A	Density D3 Calibration in Progress	A D3 density calibration is in progress.	• No action required.
N/A	Density D4 Calibration in Progress	A D4 density calibration is in progress.	• No action required.

Alert number	Alert title	Possible cause	Recommended actions
N/A	Zero Calibration in Progress	A zero calibration is in progress.	• No action required.
N/A	Reverse Flow	Flow through the device is in the reverse direction (against the flow arrow).	• No action required.

12.3 Locate a device using the HART 7 Squawk feature

The Squawk feature causes the device to show a specific pattern on its display. You can use this to locate or identify a device.

Restriction

The Squawk feature is available only with HART 7 connections from the Field Communicator. It is not available with ProLink III.

Procedure

An 0-0-0-0 pattern is shown on the display.

12.4 Flow measurement problems

Problem	Possible causes	Recommended actions
Non-zero flow reading at no-flow conditions or at zero offset	• Misaligned piping (especially in new installations) • Open or leaking valve • Incorrect sensor zero	• If the reading is not excessively high, review the live zero. You may need to restore the factory zero. • Check for open or leaking valves or seals. • Check for mounting stress on the sensor (e.g., sensor being used to support piping, misaligned piping). • Contact customer support.

Problem	Possible causes	Recommended actions
Erratic non-zero flow rate at no-flow conditions	• Leaking valve or seal • Two-phase flow • Plugged or coated sensor tube • Incorrect sensor orientation • Wiring problem • Vibration in pipeline at rate close to sensor tube frequency • Damping value too low • Mounting stress on sensor	• Verify that the sensor orientation is appropriate for your application (refer to the sensor installation manual). • Check the drive gain and the pickoff voltage. • If the wiring between the sensor and the transmitter includes a 9-wire segment, verify that the 9-wire cable shields are correctly grounded. • Check the wiring between the sensor and the transmitter. • For sensors with a junction box, check for moisture in the junction box. • Purge the sensor tubes. • Check for open or leaking valves or seals. • Check for sources of vibration. • Verify damping configuration. • Verify that the measurement units are configured correctly for your application. • Check for two-phase flow. • Check for radio frequency interference. • Contact customer support.
Erratic non-zero flow rate when flow is steady	• Two-phase flow • Damping value too low • Plugged or coated sensor tube • Output wiring problem • Problem with receiving device • Wiring problem	• Verify that the sensor orientation is appropriate for your application (refer to the sensor installation manual). • Check the drive gain and the pickoff voltage. • If the wiring between the sensor and the transmitter includes a 9-wire segment, verify that the 9-wire cable shields are correctly grounded. • Check for air entrainment, tube fouling, flashing, or tube damage. • Check the wiring between the sensor and the transmitter. • For sensors with a junction box, check for moisture in the junction box. • Purge the sensor tubes. • Check for open or leaking valves or seals. • Check for sources of vibration. • Verify damping configuration. • Verify that the measurement units are configured correctly for your application. • Check for two-phase flow. • Check for radio frequency interference. • Contact customer support.

Problem	Possible causes	Recommended actions
Inaccurate flow rate or batch total	• Wiring problem • Inappropriate measurement unit • Incorrect flow calibration factor • Incorrect meter factor • Incorrect density calibration factors • Incorrect grounding • Two-phase flow • Problem with receiving device • Incorrect sensor zero	• Check the wiring between the sensor and the transmitter. • Verify that the measurement units are configured correctly for your application. • Verify all of the characterization or calibration parameters. See the sensor tag or the calibration sheet for your meter. • Perform a bucket test to verify batch totals. • Zero the meter. • Check the grounding of all components. • Check for two-phase flow. • Verify the receiving device, and the wiring between the transmitter and the receiving device. • Check sensor coil resistance and for shorts to case. • Replace the core processor or transmitter.

12.5 Density measurement problems

Problem	Possible causes	Recommended actions
Inaccurate density reading	• Problem with process fluid • Incorrect density calibration factors • Wiring problem • Incorrect grounding • Two-phase flow • Plugged or coated sensor tube • Incorrect sensor orientation • RTD failure • Physical characteristics of sensor have changed	• Check your process conditions against the values reported by the device. • Ensure that all of the calibration parameters have been entered correctly. See the sensor tag or the calibration sheet for your meter. • Check the wiring between the sensor and the transmitter. • Check the grounding of all components. • Verify all of the characterization or calibration parameters. See the sensor tag or the calibration sheet for your meter. • Check for two-phase flow. • If two sensors with similar frequency are too near each other, separate them. • Purge the sensor tubes.

Problem	Possible causes	Recommended actions
Unusually high density reading	• Plugged or coated sensor tube • Incorrect density calibration factors • Incorrect temperature measurement • RTD problem • In high-frequency meters, this can indicate erosion or corrosion • In low-frequency meters, this can indicate tube fouling	• Ensure that all of the calibration parameters have been entered correctly. See the sensor tag or the calibration sheet for your meter. • Verify all of the characterization or calibration parameters. See the sensor tag or the calibration sheet for your meter. • Purge the sensor tubes. • Check for coating in the flow tubes.
Unusually low density reading	• Two-phase flow • Ensure that all of the calibration parameters have been entered correctly. See the sensor tag or the calibration sheet for your meter. • In low-frequency meters, this can indicate erosion or corrosion	• Check your process conditions against the values reported by the device. • Check for two-phase flow. • Verify all of the characterization or calibration parameters. See the sensor tag or the calibration sheet for your meter. • Check the wiring between the sensor and the transmitter. • Check for tube erosion, especially if the process fluid is abrasive.

12.6 Temperature measurement problems

Problem	Possible causes	Recommended actions
Temperature reading significantly different from process temperature	• RTD failure • Incorrect compensation factors • Line temperature in bypass does not match temperature in main line	• Check junction box for moisture or verdigris. • Perform RTD resistance checks and check for shorts to case (see *Section 12.31.1*). • Verify that the temperature compensation factors match the value on the sensor tag or calibration sheet. • If Alert A004, A016, or A017 is active, perform the actions recommended for that alert.

Problem	Possible causes	Recommended actions
Temperature reading slightly different from process temperature	• Sensor temperature not yet equalized • Sensor leaking heat	• If the error is within the temperature specification for the sensor, there is no problem. If the temperature measurement is outside the specification, contact customer support. • The temperature of the fluid may be changing rapidly. Allow sufficient time for the sensor to equalize with the process fluid. • Perform RTD resistance checks and check for shorts to case (see *Section 12.31.1*). • The electrical connection between the RTD and the sensor may be damaged. This may require replacing the sensor.
Inaccurate temperature data from external device	• Wiring problem • Problem with input configuration • Problem with external device • Problem with input configuration	• Verify the wiring between the transmitter and the external device. • Verify that the external device is operating correctly. • Verify the configuration of the temperature input. • Ensure that both devices are using the same measurement unit.

12.7 Milliamp output problems

Table 12-2: Milliamp output problems and recommended actions

Problem	Possible causes	Recommended actions
No mA Output	• Power supply problem • Wiring problem • Circuit failure • Channel not configured for desired output • Incorrect internal/external power configuration	• If applicable, check the output wiring to verify that the output is powered. • Check the power supply and power supply wiring. • Verify the output wiring. • Check the **Fault Action** settings. • Verify channel configuration for the affected mA Output. • Contact customer support.

Table 12-2: Milliamp output problems and recommended actions *(continued)*

Problem	Possible causes	Recommended actions
Loop test failed	• Power supply problem • Wiring problem • Circuit failure • Channel not configured for desired output • Incorrect internal/external power configuration	• If applicable, check the output wiring to verify that the output is powered. • Check the power supply and power supply wiring. • Verify the output wiring. • Check the **Fault Action** settings. • Verify channel configuration for the affected mA Output. • Contact customer support.
mA Output below 4 mA	• Incorrect internal/external power configuration • Output not powered • Open in wiring • Bad output circuit • Process condition below LRV • LRV and URV are not set correctly • Fault condition if **Fault Action** is set to Internal Zero or Downscale • Bad mA receiving device	• Check your process conditions against the values reported by the device. • Verify the receiving device, and the wiring between the transmitter and the receiving device. • Check the settings of **Upper Range Value** and **Lower Range Value**. • Check the **Fault Action** settings. • Verify channel configuration for the affected mA Output.
Constant mA Output	• Incorrect process variable assigned to the output • Fault condition exists • Non-zero HART address (mA Output 1) • Output is configured for loop test mode • Zero calibration failure • Output is configured for a range that is far in excess of intended range. Reconfigure output. • The process condition is below cutoff.	• Verify the output variable assignments. • View and resolve any existing alert conditions. • Check the HART address. If the HART address is non-zero, you may need to change the setting of **mA Output Action**. • Check to see if a loop test is in process (the output is fixed). • Check HART burst mode configuration. • If related to a zero calibration failure, cycle power to the meter and retry the zeroing procedure. • Process condition is below cutoff. Check and adjust the cutoff setting.
mA Output consistently out of range	• Incorrect process variable or units assigned to output • Fault condition if **Fault Action** is set to Upscale or Downscale • LRV and URV are not set correctly	• Verify the output variable assignments. • Verify the measurement units configured for the output. • Check the **Fault Action** settings. • Check the settings of **Upper Range Value** and **Lower Range Value**. • Check the mA Output trim.
Consistently incorrect mA measurement	• Loop problem • Output not trimmed correctly • Incorrect measurement unit configured for process variable • Incorrect process variable configured • LRV and URV are not set correctly	• Check the mA Output trim. • Verify that the measurement units are configured correctly for your application. • Verify the process variable assigned to the mA Output. • Check the settings of **Upper Range Value** and **Lower Range Value**.

Table 12-2: Milliamp output problems and recommended actions *(continued)*

Problem	Possible causes	Recommended actions
mA Output correct at lower current, but incorrect at higher current	• mA loop resistance may be set too high	• Verify that the mA Output load resistance is below the maximum supported load (see the installation manual for your transmitter).

12.8 Frequency Output problems

Table 12-3: Frequency Output problems and recommended actions

Problem	Possible causes	Recommended actions
No Frequency Output	• Stopped totalizer • Process condition below cutoff • Fault condition if **Fault Action** is set to Internal Zero or Downscale • Two-phase flow • Flow in reverse direction from configured flow direction parameter • Bad frequency receiving device • Output level not compatible with receiving device • Bad output circuit • Incorrect internal/external power configuration • Output not powered • Wiring problem	• Verify that the process conditions are below the low-flow cutoff. Reconfigure the low-flow cutoff if necessary. • Check the **Fault Action** settings. • Verify that the totalizers are not stopped. A stopped totalizer will cause the Frequency Output to be locked. • Check for two-phase flow. • Check flow direction. • Verify the receiving device, and the wiring between the transmitter and the receiving device. • Verify that the channel is wired and configured as a Frequency Output. • Verify the power configuration for the Frequency Output (internal vs. external). • Perform a loop test.
Consistently incorrect frequency measurement	• Output not scaled correctly • Incorrect measurement unit configured for process variable	• Check the Frequency Output scaling. • Verify that the measurement units are configured correctly for your application.
Erratic Frequency Output	• Radio frequency interference (RFI) from environment	• Check for radio frequency interference.
Phase on Channel C does not change with flow direction	• The Frequency Output mode is not configured to show flow direction	• Check the Frequency Output mode.
Cannot configure Channel C for Frequency Output operation	• Invalid channel selections	• FO and DO1 use the same circuitry and cannot run simultaneously. Configure Channel B as FO and Channel C as DO2.

12.9 Discrete output problems

Problem	Possible causes	Recommended actions
Cannot configure Channel B to operate as DO1	Invalid channel configuration	FO and DO1 use the same circuitry and cannot run simultaneously. Configure Channel B as FO and Channel C as DO2.
No discrete output	• Wiring problem • Circuit failure	• Check the power supply and power supply wiring. • Verify the output wiring. • Contact customer service.
Loop test failed	• Power supply problem • Wiring problem • Circuit failure	• Check the power supply and power supply wiring. • Verify the output wiring. • Contact customer service.
Discrete output readings reversed	• Wiring problem • Configuration does not match wiring	• Verify the output wiring. • Ensure that **Discrete Output Polarity** is set correctly.

12.10 Discrete Input problems

Problem	Recommended actions
Discrete Input is fixed and does not respond to input switch	Verify that the Discrete Input is wired and configured correctly for your application. *Internal* means that the transmitter will supply power. *External* means that an external pull-up resistor and source are required.

12.11 Using sensor simulation for troubleshooting

When sensor simulation is enabled, the transmitter reports user-specified values for basic process variables. This allows you to reproduce various process conditions or to test the system.

You can use sensor simulation to help distinguish between legitimate process noise and externally caused variation. For example, consider a receiving device that reports an unexpectedly erratic density value. If sensor simulation is enabled and the observed density value does not match the simulated value, the source of the problem is likely to be somewhere between the transmitter and the receiving device.

Sensor simulation requires an Enhanced Core and a communication device.

Important

When sensor simulation is active, the simulated value is used in all transmitter outputs and calculations, including totals and inventories, volume flow calculations, and concentration calculations. Disable all automatic functions related to the transmitter outputs and place the loop in manual operation. Do not enable simulation mode unless your application can tolerate these effects, and be sure to disable simulation mode when you have finished testing.

12.12 Check power supply wiring

If the power supply wiring is damaged or improperly connected, the transmitter may not receive enough power to operate properly.

Prerequisites

- You will need the installation manual for your transmitter.
- When using DC power, a minimum of 1.5 amps of startup current is required.

Procedure

1. Use a voltmeter to test the voltage at the transmitter's power supply terminals.
   - If the voltage is within the specified range, you do not have a power supply problem.
   - If the voltage is low, ensure that the power supply is adequate at the source, the power cable is sized correctly, there is no damage to the power cable, and an appropriate fuse is installed.
   - If there is no power, continue with this procedure.
2. Before inspecting the power supply wiring, disconnect the power source.

   ⚠ CAUTION!

   If the transmitter is in a hazardous area, wait five minutes after disconnecting the power.

3. Ensure that the terminals, wires, and wiring compartment are clean and dry.
4. Ensure that the power supply wires are connected to the correct terminals.
5. Ensure that the power supply wires are making good contact, and are not clamped to the wire insulation.
6. Inspect the voltage label inside the wiring compartment.

   The voltage supplied to the transmitter should match the voltage specified on the label.

7. Reapply power to the transmitter.

⚠ CAUTION!

If the transmitter is in a hazardous area, do not reapply power to the transmitter with the housing cover removed. Reapplying power to the transmitter while the housing cover is removed could cause an explosion.

8. Test the voltage at the terminals.

   If there is no power, contact customer service.

12.13 Check sensor-to-transmitter wiring

A number of power-supply and output problems may occur if the wiring between the sensor and the transmitter is improperly connected, or if the wiring becomes damaged.

Be sure to check all wiring segments:

- If you have a 4-wire transmitter, check the wiring between the transmitter and the core processor.
- If you have a 9-wire transmitter, check the wiring between the transmitter and the sensor junction box.
- If you have a remote transmitter with remote core processor, check the wiring between the transmitter and the core processor and the wiring between the core processor and the sensor junction box.

Prerequisites

You will need the installation manual for your transmitter.

Procedure

1. Before opening the wiring compartments, disconnect the power source.

   ⚠ DANGER!

   If the transmitter is in a hazardous area, wait five minutes after disconnecting the power.

2. Verify that the transmitter is connected to the sensor according to the information provided in your transmitter installation manual.
3. Verify that the wires are making good contact with the terminals.
4. Check the continuity of all wires from the transmitter to the sensor.

12.14 Check grounding

A sensor and the transmitter must be grounded. If the core processor is installed as part of the transmitter or the sensor, it is grounded automatically. If the core processor is installed separately, it must be grounded separately.

Prerequisites

You will need an:

- Installation manual for your sensor
- Installation manual for your transmitter (remote-mount installations only)

Procedure

Refer to the sensor and transmitter installation manuals for grounding requirements and instructions.

12.15 Perform loop tests

A loop test is a way to verify that the transmitter and the remote device are communicating properly. A loop test also helps you know whether you need to trim mA Outputs.

Prerequisites

- Follow appropriate procedures to ensure that loop testing will not interfere with existing measurement and control loops.

12.15.1 Perform loop tests using the display

Prerequisites

Before performing a loop test, configure the channels for the transmitter inputs and outputs that will be used in your application.

Follow appropriate procedures to ensure that loop testing will not interfere with existing measurement and control loops.

Procedure

1. Test the mA Output(s).

   a. Choose **OFFLINE MAINT** > **SIM** > **AO1 SIM** or **OFFLINE MAINT** > **SIM** > **AO2 SIM**, and select a low value, e.g., 4 mA.

      Dots traverse the display while the output is fixed.

   b. Read the mA current at the receiving device and compare it to the transmitter output.

      The readings do not need to match exactly. If the values are slightly different, you can correct the discrepancy by trimming the output.

   c. At the transmitter, activate **Select**.

   d. Scroll to and select a high value, e.g., 20 mA.

      Dots traverse the display while the output is fixed.

e. Read the mA current at the receiving device and compare it to the transmitter output.

   The readings do not need to match exactly. If the values are slightly different, you can correct the discrepancy by trimming the output.

f. At the transmitter, activate **Select**.

2. Test the Frequency Output(s).

   a. Choose **OFFLINE MAINT** > **SIM** > **FO SIM**, and select the Frequency Output value.

      The Frequency Output can be set to 1, 10, or 15 kHz.

      Note
      If the Weights & Measures application with NTEP approval is enabled on the transmitter, it is not possible to perform a loop test of the Frequency Output, even when the transmitter is unsecured.

      Dots traverse the display while the output is fixed.

   b. Read the frequency signal at the receiving device and compare it to the transmitter output.

   c. At the transmitter, activate **Select**.

3. Test the Discrete Output(s).

   a. Choose **OFFLINE MAINT** > **SIM** > **DO1 SIM** or **OFFLINE MAINT** > **SIM** > **DO2 SIM**, and select **SET ON**.

      Dots traverse the display while the output is fixed.

   b. Verify the signal at the receiving device.

   c. At the transmitter, activate **Select**.

   d. Scroll to and select **SET OFF**.

   e. Verify the signal at the receiving device.

   f. At the transmitter, activate **Select**.

4. Test the Discrete Input.

   a. Set the remote input device to generate a known fixed current.

   b. At the transmitter, choose **OFFLINE MAINT** > **SIM**, and select **READ DI**.

   c. At the transmitter, activate **Select**.

   d. Verify the signal at the transmitter.

   e. Repeat the procedure for the other signal state.

Postrequisites

- If the mA Output readings are within 20 microamps of the expected values, you can correct this discrepancy by trimming the output.
- If the discrepancy between the mA Output readings is greater than 20 microamps, or if at any step the reading was faulty, verify the wiring between the transmitter and the remote device, and try again.
- If the Discrete Output readings are reversed, check the setting of **Discrete Output Polarity**.
- If the Discrete Input readings are reversed, check the setting of **Discrete Input Polarity**.

12.15.2 Perform loop tests using ProLink III

Prerequisites

Before performing a loop test, configure the channels for the transmitter inputs and outputs that will be used in your application.

Follow appropriate procedures to ensure that loop testing will not interfere with existing measurement and control loops.

Procedure

1. Test the mA Output(s).
   a. Choose **Device Tools** > **Diagnostics** > **Testing** > **mA Output 1 Test** or **Device Tools** > **Diagnostics** > **Testing** > **mA Output 2 Test**.
   b. Enter 4 in **Fix to:**.
   c. Click **Fix mA**.
   d. Read the mA current at the receiving device and compare it to the transmitter output.

      The readings do not need to match exactly. If the values are slightly different, you can correct the discrepancy by trimming the output.

   e. Click **UnFix mA**.
   f. Enter 20 in **Fix to:**.
   g. Click **Fix mA**.
   h. Read the mA current at the receiving device and compare it to the transmitter output.

      The readings do not need to match exactly. If the values are slightly different, you can correct the discrepancy by trimming the output.

   i. Click **UnFix mA**.
2. Test the Frequency Output(s).

Note

If the Weights & Measures application with NTEP approval is enabled on the transmitter, it is not possible to perform a loop test of the Frequency Output, even when the transmitter is unsecured.

a. Choose **Device Tools** > **Diagnostics** > **Testing** > **Frequency Output Test**.
b. Enter the Frequency Output value in **Fix to**.
c. Click **Fix FO**.
d. Read the frequency signal at the receiving device and compare it to the transmitter output.
e. Click **UnFix FO**.

3. Test the Discrete Output(s).

   a. Choose **Device Tools** > **Diagnostics** > **Testing** > **Discrete Output Test**.
   b. If your transmitter is configured for two Discrete Outputs, determine which Discrete Output you want to test.
   c. Set **Fix To:** to ON.
   d. Verify the signal at the receiving device.
   e. Set **Fix To:** to OFF.
   f. Verify the signal at the receiving device.
   g. Click **UnFix**.
   h. Repeat for the other Discrete Output, if applicable.

4. Test the Discrete Input.

   a. Set the remote input device to ON.
   b. Choose **Device Tools** > **Diagnostics** > **Testing** > **Discrete Input Test**.
   c. Verify the signal at the transmitter.
   d. Set the remote input device to OFF.
   e. Verify the signal at the transmitter.

Postrequisites

- If the mA Output readings are within 20 microamps of the expected values, you can correct this discrepancy by trimming the output.
- If the discrepancy between the mA Output readings is greater than 20 microamps, or if at any step the reading was faulty, verify the wiring between the transmitter and the remote device, and try again.
- If the Discrete Output readings are reversed, check the setting of **Discrete Output Polarity**.
- If the Discrete Input readings are reversed, check the setting of **Discrete Input Polarity**.

12.15.3 Perform loop tests using the Field Communicator

Prerequisites

Before performing a loop test, configure the channels for the transmitter inputs and outputs that will be used in your application.

Follow appropriate procedures to ensure that loop testing will not interfere with existing measurement and control loops.

Procedure

1. Test the mA Output(s).
   a. Choose **Service Tools** > **Simulate** > **Simulate Outputs** > **mA Output 1 Loop Test**or **Service Tools** > **Maintenance** > **Simulate Outputs** > **mA Output 2 Loop Test**, and select **4 mA**.
   b. Read the mA current at the receiving device and compare it to the transmitter output.

      The readings do not need to match exactly. If the values are slightly different, you can correct the discrepancy by trimming the output.

   c. Press **OK**.
   d. Select **20 mA**.
   e. Read the mA current at the receiving device and compare it to the transmitter output.

      The readings do not need to match exactly. If the values are slightly different, you can correct the discrepancy by trimming the output.

   f. Press **OK**.
   g. Choose **End**.
2. Test the Frequency Output(s).

   Note
   If the Weights & Measures application with NTEP approval is enabled on the transmitter, it is not possible to perform a loop test of the Frequency Output, even when the transmitter is unsecured.

   a. Press **Service Tools** > **Simulate** > **Simulate Outputs** > **Frequency Output Test**, and choose the Frequency Output level.
   b. Read the frequency signal at the receiving device and compare it to the transmitter output.
   c. Choose **End**.
3. Test the Discrete Output(s).

a. Press **Service Tools** > **Simulate** > **Simulate Outputs** and choose **Discrete Output 1 Test** or **Discrete Output 2 Test**.
b. Choose **Off**.
c. Verify the signal at the receiving device.
d. Press **OK**.
e. Choose **On**.
f. Verify the signal at the receiving device.
g. Press **OK**.
h. Choose **End**.

4. Test the Discrete Input.
   a. Set the remote input device to ON.
   b. Press **3** > **2** > **6**.
   c. Verify the signal at the transmitter.

Postrequisites

- If the mA Output readings are within 20 microamps of the expected values, you can correct this discrepancy by trimming the output.
- If the discrepancy between the mA Output readings is greater than 20 microamps, or if at any step the reading was faulty, verify the wiring between the transmitter and the remote device, and try again.
- If the Discrete Output readings are reversed, check the setting of **Discrete Output Polarity**.

12.16 Trim mA output

Trimming an mA output calibrates the transmitter's mA output to the receiving device. If the current trim value is inaccurate, the transmitter will under-compensate or over-compensate the output.

12.16.1 Trim mA output using ProLink III

Trimming the mA output establishes a common measurement range between the transmitter and the device that receives the mA output.

Important

You must trim the output at both ends (4 mA and 20 mA to ensure that it is compensated accurately across the entire output range.

Prerequisites

Ensure that the mA output is wired to the receiving device that will be used in production.

Procedure

1. Choose **Device Tools** > **Calibration** > **MA Output Trim** > **mA Output 1 Trim**.
2. Choose **Device Tools** > **Calibration** > **MA Output Trim** > **mA Output 1 Trim** or **Device Tools** > **Calibration** > **MA Output Trim** > **mA Output 2 Trim**.
3. Follow the instructions in the guided method.
4. Check the trim results. If any trim result is less than −20 microamps or greater than +20 microamps, contact customer service.

12.16.2 Trim mA outputs using the Field Communicator

Trimming the mA output establishes a common measurement range between the transmitter and the device that receives the mA output.

Important

You must trim the output at both ends (4 mA and 20 mA to ensure that it is compensated accurately across the entire output range.

Prerequisites

Ensure that the mA output is wired to the receiving device that will be used in production.

Procedure

1. Follow the instructions in the guided method.
2. Choose .
3. Follow the instructions in the guided method.
4. Check the trim results. If any trim result is less than −20 microamps or greater than +20 microamps, contact customer service.

12.17 Check the HART communication loop

If you cannot establish or maintain HART communications, the HART loop may be wired incorrectly.

Prerequisites

You will need:

- A copy of your transmitter installation manual
- A 250–600 Ω resistor
- A Field Communicator
- Optional: the *HART Application Guide*, available at www.hartcomm.org

Procedure

1. Verify that the loop wires are connected as shown in the wiring diagrams in the transmitter installation manual.

   If your HART network is more complex than the wiring diagrams in the transmitter installation manual, contact either customer service or the HART Communication Foundation.
2. Disconnect the primary mA Output wiring from the transmitter.
3. Install a 250–600 Ω resistor across the transmitter's primary mA Output terminals.
4. Check the voltage drop across the resistor (4–20 mA = 1–5 VDC for a 250 Ω resistor).

   If voltage drop is less than 1 VDC, add resistance to achieve a voltage drop of greater than 1 VDC .
5. Connect a Field Communicator directly across the resistor and attempt to communicate (poll).

   If communication with the transmitter cannot be established, the transmitter may need service. Contact customer service.

12.18 Check HART Address and mA Output Action

If the transmitter is producing a fixed current from the mA Output, the **mA Output Action** parameter may be set incorrectly.

When the **mA Output Action** parameter is set to Fixed, the mA Output produces a fixed value, and does not report process data or implement its fault action.

When **HART Address** is changed, some configuration tools will automatically change **mA Output Action**.

Tip
Always verify **mA Output Action** after setting or changing **HART Address**.

Procedure

1. Set **HART Address** as appropriate for your HART network.

   The default address is 0. This is the recommended value unless the transmitter is in a multidrop network.
2. Set **mA Output Action** to Live.

12.19 Check HART burst mode

HART burst mode is normally disabled, and should be enabled only if a HART Triloop is being used.

1. Check to see if burst mode is enabled or disabled.
2. If burst mode is enabled, disable it.

12.20 Check Lower Range Value and Upper Range Value

If the process variable assigned to the mA Output falls below the configured **Lower Range Value** (LRV) or rises above the configured **Upper Range Value** (URV), the meter will post a saturation alert (A100), then perform the configured fault action.

1. Record your current process conditions.
2. Check the configuration of the LRV and URV.

12.21 Check mA Output Fault Action

mA Output Fault Action controls the behavior of the mA Output if the transmitter encounters an internal fault condition. If the mA Output is reporting a constant value below 4 mA or above 20 mA, the transmitter may be in a fault condition.

1. Check the status alerts for active fault conditions.
2. If there are active fault conditions, the transmitter is performing correctly. If you want to change its behavior, consider the following options:
   - Change the setting of **mA Output Fault Action**.
   - For the relevant status alerts, change the setting of **Alert Severity** to Ignore.

   Restriction
   For some status alerts, **Alert Severity** is not configurable.

3. If there are no active fault conditions, continue troubleshooting.

12.22 Check for radio frequency interference (RFI)

The transmitter's Frequency Output or Discrete Output can be affected by radio frequency interference (RFI). Possible sources of RFI include a source of radio emissions, or a large transformer, pump, or motor that can generate a strong electromagnetic field. Several methods to reduce RFI are available. Use one or more of the following suggestions, as appropriate to your installation.

Procedure

- Use shielded cable between the output and the receiving device.
  - Terminate the shielding at the receiving device. If this is impossible, terminate the shielding at the cable gland or conduit fitting.
  - Do not terminate the shielding inside the wiring compartment.
  - 360-degree termination of shielding is unnecessary.
- Eliminate the RFI source.
- Move the transmitter.

12.23 Check Frequency Output Mode

If the transmitter is configured for two frequency outputs, and **Frequency Output Mode** is not configured correctly for your application, the frequency outputs may exhibit unexpected behavior.

Frequency Output Mode is used only to define the relationship between two frequency outputs. If your transmitter is not configured for two frequency outputs, **Frequency Output Mode** is not causing your output problem.

Procedure

Verify the configuration of **Frequency Output Mode**.

12.24 Check Frequency Output Scaling Method

If **Frequency Output Scaling Method** is set incorrectly, the Frequency Output may report an incorrect value.

1. Verify the configuration of the Frequency Output.
2. If you changed the setting of **Frequency Output Scaling Method**, check the settings of all other Frequency Output parameters.

12.25 Check Frequency Output Fault Action

The **Frequency Output Fault Action** controls the behavior of the Frequency Output if the transmitter encounters an internal fault condition. If the Frequency Output is reporting a constant value, the transmitter may be in a fault condition.

1. Check the status alerts for active fault conditions.
2. If there are active fault conditions, the transmitter is performing correctly. If you want to change its behavior, consider the following options:
   - Change the setting of **Frequency Output Fault Action**.
   - For the relevant status alerts, change the setting of **Alert Severity** to Ignore.

Restriction

For some status alerts, **Alert Severity** is not configurable.

3. If there are no active fault conditions, continue troubleshooting.

12.26 Check Flow Direction

If **Flow Direction** is set inappropriately for your process, the transmitter may report flow data that is not appropriate for your requirements.

The **Flow Direction** parameter interacts with actual flow direction to affect flow values, flow totals and inventories, and output behavior. For the simplest operation, actual process flow should match the flow arrow that is on the side of the sensor case.

Procedure

1. Verify the actual direction of process flow through the sensor.
2. Verify the configuration of **Flow Direction**.

12.27 Check the cutoffs

If the transmitter cutoffs are configured incorrectly, the transmitter may report zero flow when flow is present, or very small amounts of flow under no-flow conditions.

There are separate cutoff parameters for mass flow rate, volume flow rate, gas standard volume flow rate (if applicable), and density. There is an independent cutoff for the mA Output on your transmitter. The interaction between cutoffs sometimes produces unexpected results.

Procedure

Verify the configuration of all cutoffs.

Tip

For typical applications, set **Mass Flow Cutoff** to 0.5% of the nominal flow rate of the attached sensor. See the sensor specifications for nominal flow rate data.

12.28 Check for two-phase flow (slug flow)

Two-phase flow can cause rapid changes in the drive gain. This can cause a variety of measurement issues.

1. Check for two-phase flow alerts (e.g., A105).

   If the transmitter is not generating two-phase flow alerts, verify that two-phase flow limits have been set. If limits are set, two-phase flow is not the source of your problem.

2. Check the process for cavitation, flashing, or leaks.
3. Monitor the density of your process fluid output under normal process conditions.
4. Check the settings of **Two-Phase Flow Low Limit**, **Two-Phase Flow High Limit**, and **Two-Phase Flow Timeout**.

Tip

You can reduce the occurrence of two-phase flow alerts by setting **Two-Phase Flow Low Limit** to a lower value, **Two-Phase Flow High Limit** to a higher value, or **Two-Phase Flow Timeout** to a higher value. Micro Motion recommends leaving the **Two-Phase Flow High Limit** at the default value.

12.29 Check the drive gain

Excessive or erratic drive gain may indicate any of a variety of process conditions or sensor problems.

To know whether your drive gain is excessive or erratic, you must collect drive gain data during the problem condition and compare it to drive gain data from a period of normal operation.

Excessive (saturated) drive gain

Table 12-4: Possible causes and recommended actions for excessive (saturated) drive gain

Possible cause	Recommended actions
Bent sensor tube	Check the pickoff voltages (see *Section 12.30*). If either of them are close to zero (but neither is zero), the sensor tubes may be bent. The sensor will need to be replaced.
Cavitation or flashing; settling of two-phase or three-phase fluids	• Increase the inlet or back pressure at the sensor. • If a pump is located upstream from the sensor, increase the distance between the pump and sensor. • The sensor may need to be reoriented or repositioned. Consult the installation manual for your sensor.
Cracked sensor tube	Replace the sensor.
Core processor or module failure	Contact customer support.
Flow rate out of range	Ensure that the flow rate is within sensor limits.
Incorrect sensor characterization	Verify the characterization or calibration parameters.
Open drive or pickoff sensor coil	Contact customer support.
Over-pressurized tubes	Contact customer support.

Table 12-4: Possible causes and recommended actions for excessive (saturated) drive gain *(continued)*

Possible cause	Recommended actions
Plugged sensor tube	Check the pickoff voltages (see *Section 12.30*). If either of them are close to zero (but neither is zero), plugged tubes may be the source of your problem. Purge the tubes. In extreme cases, you may need to replace the sensor.
Sensor case full of process fluid	Replace the sensor.
Sensor imbalance	Contact customer support.
Sensor tubes not completely full	Correct process conditions so that the sensor tubes are full.
Two-phase flow	Check for two-phase flow. See *Section 12.28*.
Vibrating element not free to vibrate	Ensure that the vibrating element is free to vibrate.

Erratic drive gain

Table 12-5: Possible causes and recommended actions for erratic drive gain

Possible cause	Recommended actions
Two-phase flow	Check for two-phase flow. See *Section 12.28*.
Polarity of pick-off reversed or polarity of drive reversed	Applicable for a 9-wire sensor. Check the wiring between the sensor and the transmitter.
Foreign material caught in sensor tubes	• Purge the sensor tubes. • Replace the sensor.

12.29.1 Collect drive gain data

Drive gain data can be used to diagnose a variety of process and equipment conditions. Collect drive gain data from a period of normal operation, and use this data as a baseline for troubleshooting.

Procedure

1. Navigate to the drive gain data.
2. Observe and record drive gain data over an appropriate period of time, under a variety of process conditions.

12.30 Check the pickoff voltage

If the pickoff voltage readings are unusually low, you may have any of a variety of process or equipment problems.

To know whether your pickoff voltage is unusually low, you must collect pickoff voltage data during the problem condition and compare it to pickoff voltage data from a period of normal operation.

Drive gain and pickoff voltage are inversely proportional. As drive gain increases, pickoff voltages decrease and vice versa.

Table 12-6: Possible causes and recommended actions for low pickoff voltage

Possible cause	Recommended actions
Cavitation or flashing; settling of two-phase or three-phase fluids	• Increase the inlet or back pressure at the sensor. Increasing back pressure is recommended. Applying back pressure downstream from the sensor can prevent flashing inside the sensor tubes. That way, if the process fluid is going to flash, it will do so downstream from the sensor after it has been measured. • If a pump is located upstream from the sensor, increase the distance between the pump and sensor. • The sensor may need to be reoriented or repositioned. Consult the installation manual for your sensor.
Faulty wiring runs between the sensor and transmitter	Verify wiring between sensor and transmitter.
Process flow rate beyond the limits of the sensor	Verify that the process flow rate is not out of range of the sensor.
Two-phase flow	Check for two-phase flow. See *Section 12.28*.
The vibrating element is not vibrating	• Check for plugging or deposition. • Ensure that the vibrating element is free to vibrate (no mechanical binding). • Verify wiring. • Test coils at sensor. See *Section 12.31.1*.
Moisture in the sensor electronics	Eliminate the moisture in the sensor electronics.
The sensor is damaged, or sensor magnets may have become demagnetized	Replace the sensor.

12.30.1 Collect pickoff voltage data

Pickoff voltage data can be used to diagnose a variety of process and equipment conditions. Collect pickoff voltage data from a period of normal operation, and use this data as a baseline for troubleshooting.

Procedure

1. Navigate to the pickoff voltage data.
2. Observe and record data for both the left pickoff and the right pickoff, over an appropriate period of time, under a variety of process conditions.

12.31 Check for internal electrical problems

Shorts between sensor terminals or between the sensor terminals and the sensor case can cause the sensor to stop working.

Possible cause	Recommended action
Moisture inside the sensor junction box	Ensure that the junction box is dry and no corrosion is present.
Liquid or moisture inside the sensor case	Contact customer support.
Internally shorted feedthrough	Contact customer support.
Faulty cable	Replace the cable.
Improper wire termination	Verify wire terminations inside the sensor junction box. See the Micro Motion document titled, *9-Wire Flowmeter Cable Preparation and Installation Guide*.

12.31.1 Check the sensor coils

Checking the sensor coils can identify a cause for a no sensor response alert.

Restriction

This procedure applies only to 9-wire remote-mount transmitters and remote transmitters with remote core processors.

Procedure

1. Disconnect power to the transmitter.

   ⚠ DANGER!

   If the transmitter is in a hazardous area, wait 5 minutes before continuing.

2. Remove the end-cap from the core processor housing.
3. Unplug the terminal blocks from the terminal board on the core processor.
4. Using a digital multimeter (DMM), check the pickoff coils by placing the DMM leads on the unplugged terminal blocks for each terminal pair. See the following table for a list of the coils. Record the values.

Table 12-7: Coils and test terminal pairs

Coil	Sensor model	Terminal colors
Drive coil	All	Brown to red
Left pickoff coil (LPO)	All	Green to white
Right pickoff coil (RPO)	All	Blue to gray

Table 12-7: Coils and test terminal pairs *(continued)*

Coil	Sensor model	Terminal colors
Resistance temperature detector (RTD)	All	Yellow to violet
Lead length compensator (LLC)	All except T-Series and CMF400 (see note)	Yellow to orange
Composite RTD	All CMFSs, T-Series, H300, and F300	Yellow to orange
Fixed resistor (see note)	CMFS007, CMFS010, CMFS015, CMF400, and F300	Yellow to orange

Note

The F300/H300/CMF400 fixed resistor applies to only certain specific sensor releases. Contact customer support for more information.

There should be no open circuits, that is, no infinite resistance readings. The left pickoff and right pickoff readings should be the same or very close (±5 Ω). If there are any unusual readings, repeat the coil resistance tests at the sensor junction box to eliminate the possibility of faulty cable. The readings for each coil pair should match at both ends.

5. Test the terminals in the sensor junction box for shorts to case.

   Test results will be inconclusive with nonconductive process fluids such as hydrocarbons.

   a. Leave the terminal blocks disconnected.
   b. Remove the lid of the junction box.
   c. Testing one terminal at a time, place a DMM lead on the terminal and the other lead on the sensor case.

      With the DMM set to its highest range, there should be infinite resistance on each lead. If there is any resistance at all, there is a short to case.

6. Test the resistance of junction box terminal pairs.

   a. Test the brown terminal against all other terminals except the red one.
   b. Test the red terminal against all other terminals except the brown one.
   c. Test the green terminal against all other terminals except the white one.
   d. Test the white terminal against all other terminals except the green one.
   e. Test the blue terminal against all other terminals except the gray one.
   f. Test the gray terminal against all other terminals except the blue one.
   g. Test the orange terminal against all other terminals except the yellow and violet ones.

h. Test the yellow terminal against all other terminals except the orange and violet ones.

i. Test the violet terminal against all other terminals except the yellow and orange ones.

There should be infinite resistance for each pair. If there is any resistance at all, there is a short between terminals.

Postrequisites

To return to normal operation:

1. Plug the terminal blocks into the terminal board.
2. Replace the end-cap on the core processor housing.
3. Replace the lid on the sensor junction box.

Important

When reassembling the meter components, be sure to grease all O-rings.

12.32 Check the core processor LED

The core processor has an LED that indicates different meter conditions.

1. Maintain power to the transmitter.
2. If you have a 4-wire remote installation or a remote core processor with remote transmitter installation:
   a. Remove the core processor lid. The core processor is intrinsically safe and can be opened in all environments.
   b. Check the state of the core processor LED.
3. If you have an integral installation:
   a. Loosen the four cap screws that fasten the transmitter to the base.

Figure 12-1: Integral installation components

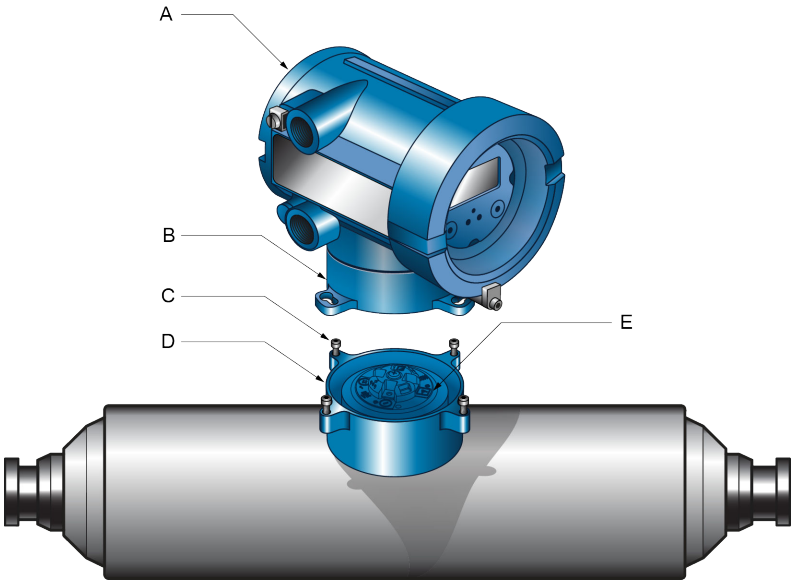

A. Transmitter
B. Transition ring
C. 4 x cap screws (4 mm)
D. Base
E. Core processor

b. Rotate the transmitter counter-clockwise so that the cap screws are in the unlocked position.

c. Gently lift the transmitter straight up, disengaging it from the cap screws.

Important

Do not disconnect or damage the wires that connect the transmitter to the core processor.

d. Check the state of the core processor LED.

4. If you have a 9-wire remote installation:

a. Remove the end-cap.

Figure 12-2: 9-wire remote installation components

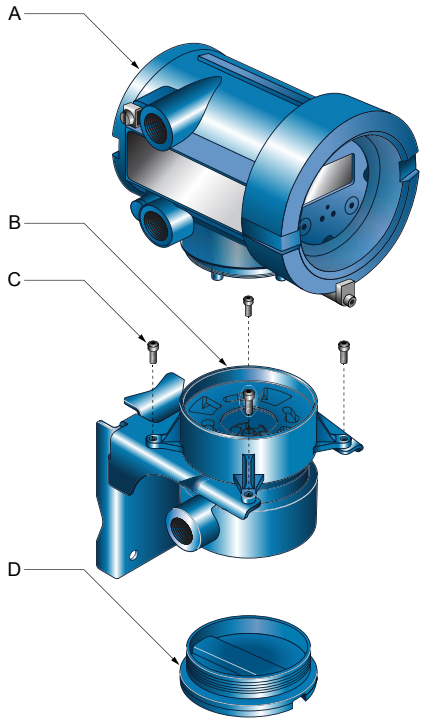

A. Transmitter
B. Core processor
C. 4 x cap screws (4 mm)
D. End cap

b. Inside the core processor housing, loosen the three screws that hold the core processor mounting plate in place.

   Do not remove the screws.

c. Rotate the mounting plate so that the screws are in the unlocked position.

d. Holding the tab on the mounting plate, slowly lower the mounting plate so that the top of the core processor is visible.

Important
Do not disconnect or damage the wires that connect the transmitter to the core processor.

e. Check the state of the core processor LED.

Postrequisites

To return to normal operation:

- For a 4-wire remote installation or a remote core processor with remote transmitter installation, replace the core processor lid.
- For an integral installation:
  1. Without pinching or stretching the wires, lower the transmitter onto the base, inserting the cap screws into the slots.
  2. Rotate the transmitter clockwise so that the cap screws are in the locked position.
  3. Tighten the cap screws, torquing to 20 to 30 in-lbs (2.3 to 3.4 N-m.
- For a 9-wire remote installation:
  1. Without pinching or stressing the wires, slide the mounting plate into place.
  2. Rotate the mounting plate so that the screws are in the locked position.
  3. Tighten the screws, torquing to 6 to 8 in-lbs (0.7 to 0.9 N-m.
  4. Replace the end-cap.

Important

When reassembling the meter components, be sure to grease all O-rings.

12.32.1 Core processor LED states

Table 12-8: Standard core processor LED states

LED state	Description	Recommended actions
1 flash per second (ON 25%, OFF 75%)	Normal operation	No action required.
1 flash per second (ON 75%, OFF 25%)	Slug flow (two-phase flow)	See *Section 12.28*.
Solid ON	Zero or calibration in progress	No action required.
	Core processor receiving between 11.5 and 5 volts	Check power supply to transmitter.
3 rapid flashes, followed by pause	Sensor not recognized	Check wiring between transmitter and sensor.
	Improper configuration	Check sensor characterization parameters.
	Broken pin between sensor and core processor	The meter requires factory service.
4 flashes per second	Fault condition	Check alert status.

Table 12-8: Standard core processor LED states *(continued)*

LED state	Description	Recommended actions
OFF	Core processor receiving less than 5 volts	• Verify power supply wiring to core processor. • If transmitter status LED is lit, transmitter is receiving power. Check voltage across terminals 1 (VDC+) and 2 (VDC–) in core processor. If reading is less than 1 VDC, verify power supply wiring to core processor. Wires may be switched. • If transmitter status LED is not lit, transmitter is not receiving power. Check power supply. If power supply is operational, internal transmitter, display, or LED failure is possible – the meter may require factory service.
	Core processor internal failure	The meter requires factory service.

Table 12-9: Enhanced core processor LED states

LED state	Description	Recommended action
Solid green	Normal operation	No action required.
Flashing yellow	Zero in progress	No action required.
Solid yellow	Low-severity alert	Check alert status.
Solid red	High-severity alert	Check alert status.
Flashing red (80% on, 20% off)	Tubes not full	• If alert A105 (slug flow) is active, refer to the recommended actions for that alert. • If alert A033 (tubes not full) is active, verify process. Check for air in the flow tubes, tubes not filled, foreign material in tubes, or coating in tubes.
Flashing red (50% on, 50% off)	Electronics failed	The meter requires factory service.
Flashing red (50% on, 50% off, skips every 4th)	Sensor failed	The meter requires factory service.
OFF	Core processor receiving less than 5 volts	• Verify power supply wiring to core processor. • If transmitter status LED is lit, transmitter is receiving power. Check voltage across terminals 1 (VDC+) and 2 (VDC–) in core processor. If reading is less than 1 VDC, verify power supply wiring to core processor. Wires may be switched. • If transmitter status LED is not lit, transmitter is not receiving power. Check power supply. If power supply is operational, internal transmitter, display, or LED failure is possible – the meter may require factory service.

Table 12-9: Enhanced core processor LED states *(continued)*

LED state	Description	Recommended action
	Core processor internal failure	The meter requires factory service.

12.33 Perform a 700 core processor resistance test

Note

You can perform a resistance test only on a 700 core processor.

Procedure

1. Power down the transmitter.
2. If you have a 4-wire remote installation or a remote core processor with remote transmitter installation, remove the core processor lid.
3. If you have an integral installation:

   a. Loosen the four cap screws that fasten the transmitter to the base.

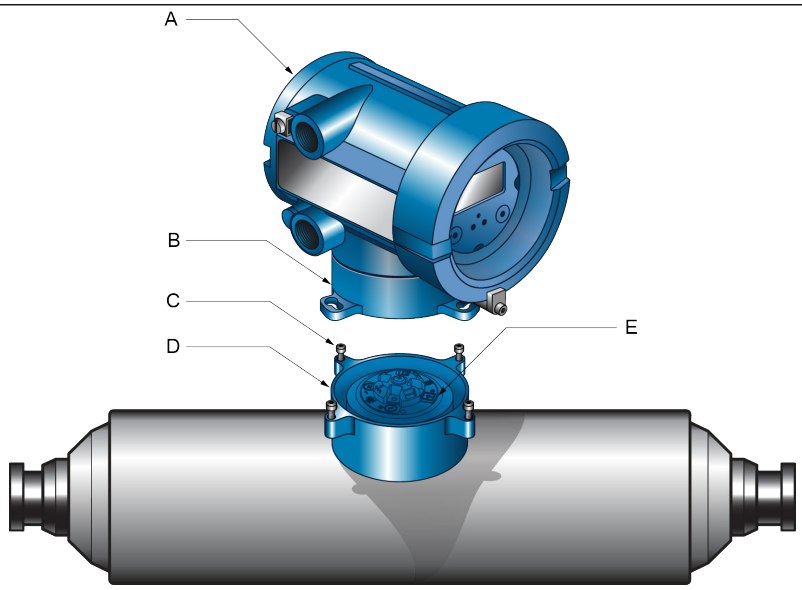

A. Transmitter
B. Transition ring
C. 4 x cap screws (4 mm)
D. Base
E. Core processor

   b. Rotate the transmitter counter-clockwise so that the cap screws are in the unlocked position.

c. Gently lift the transmitter straight up, disengaging it from the cap screws.

4. If you have a 9-wire remote installation:

a. Remove the end-cap.

Figure 12-3: 9-wire remote installation components

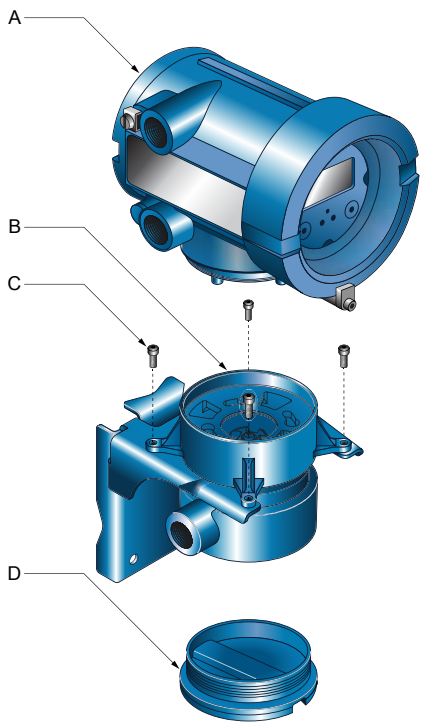

A. Transmitter
B. Core processor
C. 4 x cap screws (4 mm)
D. End-cap

b. Inside the core processor housing, loosen the three screws that hold the core processor mounting plate in place.

Do not remove the screws.

c. Rotate the mounting plate so that the screws are in the unlocked position.

d. Holding the tab on the mounting plate, slowly lower the mounting plate so that the top of the core processor is visible.

5. At the core processor, disconnect the 4-wire cable between the core processor and the transmitter.

6. Measure the resistance between core processor terminal pairs 3–4, 2–3, and 2–4.

Terminal pair	Function	Expected resistance
3–4	RS-485/A and RS-485/B	40 kΩ to 50 kΩ
2–3	VDC– and RS-485/A	20 kΩ to 25 kΩ
2–4	VDC– and RS-485/B	20 kΩ to 25 kΩ

7. If any resistance measurements are lower than specified, the core processor may not be able to communicate with a transmitter or a remote host. The meter may need factory service.

Postrequisites

To return to normal operation:

- For a 4-wire remote installation or a remote core processor with remote transmitter installation:
  1. Reconnect the 4-wire cable between the core processor and the transmitter.
  2. Replace the core processor lid.
  3. Restore power to the transmitter.
- For an integral installation:
  1. Reconnect the 4-wire cable between the core processor and the transmitter.
  2. Without pinching or stretching the wires, lower the transmitter onto the base, inserting the cap screws into the slots.
  3. Rotate the transmitter clockwise so that the cap screws are in the locked position.
  4. Tighten the cap screws, torquing to 20 to 30 in-lbs (2.3 to 3.4 N-m.
  5. Restore power to the transmitter.
- For a 9-wire remote installation:
  1. Reconnect the 4-wire cable between the core processor and the transmitter.
  2. Without pinching or stressing the wires, slide the mounting plate into place.
  3. Rotate the mounting plate so that the screws are in the locked position.
  4. Tighten the screws, torquing to 6 to 8 in-lbs (0.7 to 0.9 N-m.
  5. Replace the end-cap.
  6. Restore power to the transmitter.

Important

When reassembling the meter components, be sure to grease all O-rings.

Appendix A
Using the transmitter display

Topics covered in this appendix:

- *Components of the transmitter interface*
- *Use the optical switches*
- *Access and use the display menu system*
- *Display codes for process variables*
- *Codes and abbreviations used in display menus*

A.1 Components of the transmitter interface

The transmitter interface includes the status LED, the display (LCD panel), and two optical switches.

Figure A-1: Transmitter interface

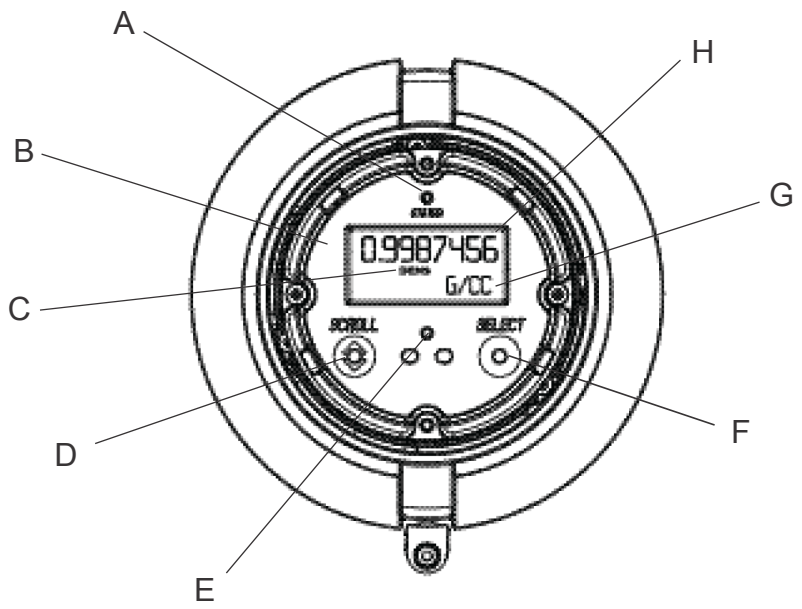

A. Status LED
B. Display (LCD panel)
C. Process variable
*D. **Scroll** optical switch*
E. Optical switch indicator
*F. **Select** optical switch*
G. Unit of measure for process variable
H. Current value of process variable

A.2 Use the optical switches

Use the optical switches on the transmitter interface to control the transmitter display. The transmitter has two optical switches: **Scroll** and **Select**.

Procedure

To activate an optical switch, block the light by holding your thumb or finger in front of the opening.

Tip
You can activate the optical switch through the lens. Do not remove the transmitter housing cover.

The optical switch indicator lights up when the transmitter senses that an optical switch has been activated.

Table A-1: Optical switch indicator and optical switch states

Optical switch indicator	State of optical switches
Solid red	One optical switch is activated.
Flickering red	Both optical switches are activated.

A.3 Access and use the display menu system

The display menu system is used to perform various configuration, administrative, and maintenance tasks.

Tip

The display menu system does not provide complete configuration, administrative, or maintenance functions. For complete transmitter management, you must use another communications tool.

Prerequisites

To access the display menu system, operator access to either the Off-Line menu or the Alert menu must be enabled. To access the complete menu system, operator access must be enabled for both the Off-Line menu and the Alert menu.

Procedure

1. At the transmitter display, activate the**Scroll** and **Select** optical switches simultaneously until the display changes.

   You will enter the Off-Line menu at any of several locations, depending on several factors.

   - If an alert is active and access to the Alert menu is enabled, you will see **SEE ALARM**.
   - If no alert is active and Smart Meter Verification is enabled on the transmitter, you will see **ENTER METER VERFY**.
   - If no alert is active and Smart Meter Verification is not enabled on the transmitter, you will see **OFF-LINE MAINT**.

2. If **CODE?** appears on the display when you make a choice, enter the value that is configured for **Off-Line Password**.

   a. With the cursor flashing on the first digit, activate **Scroll** until the correct digit is displayed, then activate **Select**.

   b. Repeat this process for the second, third, and fourth digits.

   Tip

   If you do not know the correct value for **Off-Line Password**, wait 30 seconds. The password screen will time out automatically and you will be returned to the previous screen.

3. Use the **Scroll** and **Select** optical switches to navigate to your destination in the display menu system.
   - Use **Scroll** to move through a list of options.
   - Use **Select** to choose the current option.
4. If **Scroll** flashes on the display, activate the **Scroll** optical switch, then the **Select** optical switch, and then the **Scroll** optical switch again.

   The display will prompt you through this sequence. The **Scroll-Select-Scroll** sequence is designed to guard against accidental activation of the off-line menu. It is not designed as a security measure.
5. To exit a display menu and return to a higher-level menu:
   - Activate **Scroll** until the **EXIT** option is displayed, then activate **Select**.
   - If the **EXIT** option is not available, activate **Scroll** and **Select** simultaneously and hold until the screen returns to the previous display.
6. To exit the display menu system, you can use either of the following methods:
   - Exit each menu separately, working your way back to the top of the menu system.
   - Wait until the display times out and returns to displaying process variable data.

A.3.1 Enter a floating-point value using the display

Certain configuration values (for example, **Lower Range Value** and **Upper Range Value**) are entered as floating-point values. The display supports both decimal notation and exponential notation for floating-point values.

The display allows you to enter a maximum of 8 characters, including the sign. The decimal point is not counted as a character. Exponential notation is used to enter values that require more than 8 characters.

Enter a floating-point value using decimal notation

Decimal notation allows you to enter values between –9999999 and 99999999. You can use the decimal point to enter values with a precision of 0 through 4 (4 characters to the right of the decimal point).

Decimal values entered via the display must meet the following requirements:

- They can contain a maximum of 8 digits, or 7 digits plus a minus sign (−) to indicate a negative number.
- They can contain a decimal point. The decimal point does not count as a digit. The decimal point must be positioned so that the precision of the value does not exceed 4.

When you first enter the configuration screen, the current configuration value is displayed in decimal notation, and the active character is flashing. If the value is positive, no sign is displayed. If the value is negative, a minus sign is displayed.

Procedure

- To change the value:

  1. Activate **Select** until the digit you want to change is active (flashing).

     Select moves the cursor one position to the left. From the leftmost position, **Select** moves the cursor to the rightmost digit.
  2. Activate **Scroll** to change the value of the active digit.
  3. Repeat until all digits are set as desired.
- To change the sign of the value:

  - If the current value is negative, activate **Select** until the minus sign is flashing, then activate **Scroll** until the space is blank.
  - If the current value is positive and there is a blank space at the left of the value, activate **Select** until the cursor is flashing under the blank space, then activate **Scroll** until the minus sign appears.
  - If the current value is positive and there is no blank space at the left of the value, activate **Select** until the cursor is flashing under the leftmost digit, then activate **Scroll** until the minus sign appears.
- To move the decimal point:

  1. Activate **Select** until the decimal point is flashing.
  2. Activate **Scroll**.

     The decimal point is removed from its current position.
  3. Activate **Select** and watch the position of the decimal point.

     As the cursor moves to the left, the decimal point will flash between each pair of digits, up to a maximum precision of four (four digits to the right of the decimal point).

     Tip
     If the position is not valid, the decimal point is not displayed. Continue to activate **Select** until the decimal point appears at the right of the displayed value.
  4. When the decimal point is in the desired position, activate **Scroll**.

     The decimal point is inserted at its current position.
- To save the displayed value to transmitter memory, activate **Scroll** and **Select** simultaneously and hold until the display changes.

  - If the displayed value is the same as the value in transmitter memory, you will be returned to the previous screen.
  - If the displayed value is not the same as the value in transmitter memory, **SAVE/ YES?** flashes on the display. Activate **Select**.
- To exit the menu without saving the displayed value to transmitter memory, activate **Scroll** and **Select** simultaneously and hold until the display changes.

- If the displayed value is the same as the value in transmitter memory, you will be returned to the previous screen.
- If the displayed value is not the same as the value in transmitter memory, **SAVE/ YES?** flashes on the display. Activate **Scroll**.

Enter a floating-point value using exponential notation

Exponential notation is used to enter values that are larger than 99999999 or smaller than −9999999.

Exponential values entered via the display must be in the following form: SX.XXXEYY. In this string:

- S = Sign. A minus sign (−) indicates a negative number. A blank indicates a positive number.
- X.XXX = The 4-digit mantissa.
- E = The exponent indicator.
- YY = The 2-digit exponent.

Procedure

1. Switch from decimal notation to exponential notation.

   a. Activate **Select** as required until the rightmost digit is flashing.

   b. Activate **Scroll** until E is displayed.

   c. Activate **Select**.

   Tip
   If you have modified the value in decimal notation without saving the changes to transmitter memory, the changes will be lost when you switch to exponential notation. Save the decimal value before switching to exponential notation.

2. Enter the exponent.

   The first character may be a minus sign or any digit between 0 and 3. The second character may be any digit between 0 and 9.

   a. Activate **Select** to move the cursor to the rightmost character on the display.

   b. Activate **Scroll** until the desired character is displayed.

   c. Activate **Select** to move the cursor one position to the left.

   d. Activate **Scroll** until the desired character is displayed.

3. Enter the mantissa.

   The mantissa must be a 4-digit value with a precision of 3 (that is, all values between 0.000 and 9.999).

   a. Activate **Select** to move the cursor to the rightmost digit in the mantissa.

   b. Activate **Scroll** until the desired character is displayed.

   c. Activate **Select** to move the cursor one digit to the left.

d. Activate **Scroll** until the desired character is displayed.
e. Activate **Select** to move the cursor one digit to the left.
f. Activate **Scroll** until the desired character is displayed.
g. Activate **Select** to move the cursor one digit to the left.
h. Activate **Scroll** until the desired character is displayed.

4. Enter the sign.

   a. Activate **Select** to move the cursor one digit to the left.
   b. Activate **Scroll** until the desired character is displayed.

      For positive numbers, select a blank space.

5. To save the displayed value to transmitter memory, activate **Scroll** and **Select** simultaneously and hold until the display changes.

   - If the displayed value is the same as the value in transmitter memory, you will be returned to the previous screen.
   - If the displayed value is not the same as the value in transmitter memory, **SAVE/ YES?** flashes on the display. Activate **Select**.

6. Switch back from exponential notation to decimal notation.

   a. Activate **Select** until the `E` is flashing.
   b. Activate **Select** until `d` is displayed.
   c. Activate **Select**.

A.4 Display codes for process variables

Table A-2: Display codes for process variables

Code	Definition	Comment or reference
AVE_D	Average density	Petroleum measurement application only
AVE_T	Average temperature	Petroleum measurement application only
BRD_T	Board temperature	
CONC	Concentration	Concentration measurement application only
DRIVE%	Drive gain	
EXT_P	External pressure	
EXT_T	External temperature	
FVZ	Field verification zero	Weights & Measures application only
GSV F	Gas standard volume flow	
GSV I	Gas standard volume inventory	
GSV T	Gas standard volume total	
LPO_A	Left pickoff amplitude	

Table A-2: Display codes for process variables *(continued)*

Code	Definition	Comment or reference
LVOLI	Volume inventory	
LZERO	Live zero flow	
MASSI	Mass inventory	
MTR_T	Case temperature (T-Series sensors only)	
NET M	Net mass flow rate	Concentration measurement application only
NET V	Net volume flow rate	Concentration measurement application only
NETMI	Net mass inventory	Concentration measurement application only
NETVI	Net volume inventory	Concentration measurement application only
PWRIN	Input voltage	Refers to power input to the core processor
RDENS	Density at reference temperature	Concentration measurement application only
RPO_A	Right pickoff amplitude	
SGU	Specific gravity units	
STD V	Standard volume flow rate	Concentration measurement application only
STDVI	Standard volume inventory	Concentration measurement application only
TCDENS	Temperature-corrected density	Petroleum measurement application only
TCORI	Temperature-corrected inventory	Petroleum measurement application only
TCORR	Temperature-corrected total	Petroleum measurement application only
TCVOL	Temperature-corrected volume	Petroleum measurement application only
TUBEF	Raw tube frequency	
WTAVE	Weighted average	

A.5 Codes and abbreviations used in display menus

Table A-3: Codes and abbreviations used in display menus

Code or abbreviation	Definition	Comment or reference
ACK ALARM	Acknowledge alarm	
ACK ALL	Acknowledge all alarms	
ACT	Action	
ADDR	Address	
AO1	Analog output 1 (primary mA Output)	
AO 1 SRC	Fixed to the process variable assigned to the primary output	

Table A-3: Codes and abbreviations used in display menus *(continued)*

Code or abbreviation	Definition	Comment or reference
AO2	Analog output 2 (secondary mA Output)	
AUTO SCRLL	Auto Scroll	
BKLT B LIGHT	Backlight	
CAL	Calibrate	
CH A	Channel A	
CHANGE PASSW CHANGE CODE	Change password or passcode	Change the password or passcode required for access to display functions
CH B	Channel B	
CH C	Channel C	
CONFG	Configuration	
CORE	Core processor	
CUR Z	Current zero	
CUSTODY XFER	Custody transfer	
DENS	Density	
D EV	Discrete event	Events configured using the enhanced event model
DFLOW	Differential mass flow	Fuel consumption applications only
DGAIN, DRIVE %	Drive gain	
DI	Discrete Input	
DISBL	Disable	**Select** to disable
DO1	Discrete Output 1	
DO2	Discrete Output 2	
DSPLY	Display	
E1OR2	Event 1 or Event 2	Events configured using the basic event model
ENABL	Enable	**Select** to enable
ENABLE ACK	Enable acknowledge all	Enable or disable the ACK ALL function
ENABLE ALARM	Enable alarm menu	Access to alarm menu from display
ENABLE AUTO	Enable Auto Scroll	Enable or disable the Auto Scroll function
ENABLE OFFLN	Enable off-line	Access to off-line menu from display
ENABLE PASSW	Enable password	Enable or disable password protection for display functions
ENABLE RESET	Enable totalizer reset	Enable or disable totalizer reset from display
ENABLE START	Enable totalizer start	Enable or disable totalizer start/stop from display

Table A-3: Codes and abbreviations used in display menus *(continued)*

Code or abbreviation	Definition	Comment or reference
EVNT1	Event 1	Event configured using the basic event model only
EVNT2	Event 2	Event configured using the basic event model only
EXTRN	External	
FAC Z	Factory zero	
FCF	Flow calibration factor	
FLDIR	Flow direction	
FL SW FLSWT	Flow switch	
FO	Frequency Output	
FO FREQ	Frequency factor	
FO RATE	Rate factor	
FREQ	Frequency	
FR FL	Frequency=Flow	
GSV	Gas standard volume	
HYSTRSIS	Hysteresis	
INTERN	Internal	
IO	Input/output	
LANG	Language	
LOCK	Write-protect	
LOOP CUR	Loop current	
M_ASC	Modbus ASCII	
M_RTU	Modbus RTU	
MAO1	mA Output 1 (primary mA Output)	
MAO2	mA Output 2 (secondary mA Output)	
MASS	Mass flow	
MBUS	Modbus	
MFLOW	Mass flow	
MSMT	Measurement	
MTR F	Meter factor	
OFF-LINE MAINT	Off-line maintenance	
OFFLN	Off-line	
OIL	Uncorrected oil flow	PVR applications only

Table A-3: Codes and abbreviations used in display menus *(continued)*

Code or abbreviation	Definition	Comment or reference
OIL60	Corrected Net Oil Flow	PVR applications only
P/UNT	Pulses/unit	
POLAR	Polarity	
PRESS	Pressure	
QUAD	Quadrature	
r.	Revision	
SCALE	Scaling method	
SFM60	Shrinkage factor corrected volume of mix at 60F	PVR applications only
SFO60	Shrinkage Fac Corr Net Oil Total at Reference	PVR applications only
SIM	Simulation	Used for loop testing, not simulation mode. Simulation mode is not accessible through the display.
SPECL	Special	
SRC	Source	Variable assignment
TEMP, TEMPR	Temperature	
UNT/P	Units/pulse	
VAR 1	Display Variable 1	
VER	Version	
VERFY	Verify	
VFLOW	Volume flow	
VOL	Volume, volume flow	
WATER	Uncorrected Net Water Flow Rate	PVR applications only
WATER%	Uncorrected Water Cut	PVR applications only
WCT60%	Water Cut 60F	PVR applications only
WRPRO	Write protect	PVR applications only
WTR60	Corrected Net Water Flow	PVR applications only
XMTR	Transmitter	

Appendix B
Using ProLink III with the transmitter

Topics covered in this appendix:

- *Basic information about ProLink III*
- *Connect with ProLink III*

B.1 Basic information about ProLink III

ProLink III is a configuration and service tool available from Micro Motion. ProLink III runs on a Windows platform and provides complete access to transmitter functions and data.

Version requirements

To support all the latest firmware features, device firmware v8.0, ProLink III v4.0 or later is required. For details about ProLink III device support, refer to the ProLink III ChangeLog.txt file.

ProLink III requirements

To install ProLink III, you must have:

- The ProLink III installation media
- The ProLink III installation kit for your connection type:

To obtain ProLink III and the appropriate installation kit, contact customer support.

ProLink III documentation

Most of the instructions in this manual assume that you are already familiar with ProLink III or that you have a general familiarity with Windows programs. If you need more information than this manual provides, see the *ProLink® III Configuration and Service Tool for Micro Motion® Transmitters: User Manual*.

In most ProLink III installations, the manual is installed with the ProLink III program. Additionally, the ProLink III manual is available on the documentation CD or at *www.emerson.com*.

ProLink III features and functions

ProLink III offers complete transmitter configuration and operation functions. ProLink III also offers a number of additional features and functions, including:

- A Professional version with expanded features not available on the Basic version.
- The ability to save the transmitter configuration set to a file on the PC, and reload it or propagate it to other transmitters
- The ability to log specific types of data to a file on the PC
- The ability to view performance trends for various types of data on the PC

- The ability to connect to and view information for more than one device
- A guided connection wizard

These features are documented in the ProLink III manual. They are not documented in the current manual.

ProLink III messages

As you use ProLink III with a Micro Motion transmitter, you will see a number of messages and notes. This manual does not document all of these messages and notes.

Important

The user is responsible for responding to messages and notes and complying with all safety messages.

B.2 Connect with ProLink III

A connection from ProLink III to your transmitter allows you to read process data, configure the transmitter, and perform maintenance and troubleshooting tasks.

B.2.1 Connection types supported by ProLink III

Different connection types are available for connecting from ProLink III to the transmitter. Choose the connection type appropriate to your network and the tasks you intend to perform.

The transmitter supports the following ProLink III connection types:

- Service port connections
- HART/Bell 202 connections

When selecting a connection type, consider the following:

- Service port connections are specialized Modbus/RS-485 connections that use standard connection parameters and a standard address that are already defined in ProLink III. Service port connections are typically used by field service personnel for specific maintenance and diagnostic functions. Use a service port connection only when another connection type does not provide the functionality you need.
- HART/Bell 202 connections use standard HART connection parameters that are already defined in ProLink III. The only parameter you must configure is the transmitter address.
- Some connection types require opening the wiring compartment or the power supply compartment. These connection types should be used only for temporary connections, and may require extra safety precautions.
- When you are using a HART connection, ProLink III will not allow you to open more than one window at a time. This is done to manage network traffic and optimize speed.

- You cannot make concurrent Modbus connections if the connections use the same terminals. You can make concurrent Modbus connections if the connections use different terminals.

B.2.2 Connect with ProLink III to the service port

⚠ CAUTION!

If the transmitter is in a hazardous area, do not use a service port connection. Service port connections require opening the wiring compartment, and opening the wiring compartment while the transmitter is powered up could cause an explosion. To connect to the transmitter in a hazardous environment, use a connection method that does not require removing the transmitter housing cover.

Prerequisites

- ProLink III is installed and licensed on your PC
- One of the following:
  - RS-232 to RS-485 signal converter
  - USB to RS-485 signal converter
- An available serial port or USB port
- Adapters as required (for example, 9-pin to 25-pin)

Procedure

1. Attach the signal converter to the serial port or USB port on your PC.
2. Access the service port terminals:
   a. Remove the transmitter end-cap to access the wiring compartment.
   b. Loosen the screw on the Warning flap and open the power supply compartment.
3. Connect the leads from the signal converter to the service port, terminals 7 (RS-485/A) and 8 (RS-485/B).

Tip
Usually, but not always, the red lead is RS-485/A and the black lead is RS-485/B.

Figure B-1: Connection to service port

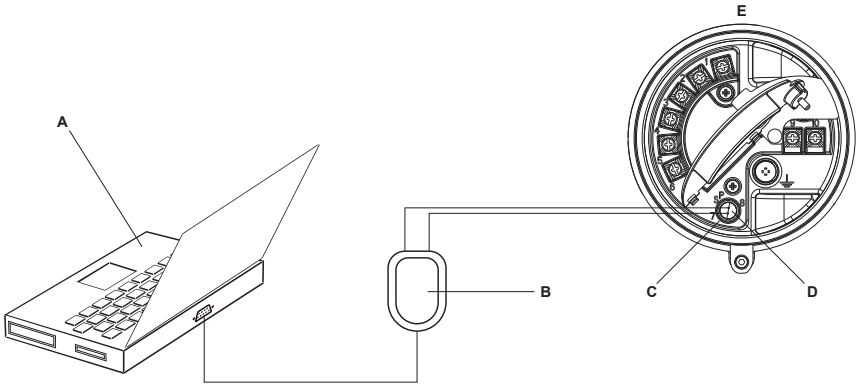

A. PC
B. Signal converter
C. Service port terminal 7 (RS-485/A)
D. Service port terminal 8 (RS-485/B)
E. Transmitter, with wiring compartment and power supply compartment opened

Note
This figure shows a serial port connection. USB connections are also supported.

4. Start ProLink III.
5. Choose **Connect to Physical Device**.
6. Set **Protocol** to Service Port.

Tip
Service port connections use standard connection parameters and a standard address. You do not need to configure them here.

7. Set the **PC Port** value to the PC COM port that you are using for this connection.
8. Click **Connect**.

Need help? If an error message appears:

- Switch the leads and try again.
- Ensure that you have specified the correct port on your PC.
- Check the wiring between the PC and the transmitter.

B.2.3 Make a HART/Bell 202 connection

You can connect directly to the primary mA terminals on the transmitter, to any point in a local HART loop, or to any point in a HART multidrop network.

⚠ CAUTION!

If the transmitter is in a hazardous area, do not connect directly to the transmitter terminals. Connecting directly to the transmitter terminals requires opening the wiring compartment, and opening the wiring compartment while the transmitter is powered up could cause an explosion. To connect to the transmitter in a hazardous environment, use a connection method that does not require opening the wiring compartment.

⚠ CAUTION!

If you connect directly to the mA terminals, the transmitter's mA Output may be affected. If you are using the mA Output for process control, set devices for manual control before connecting directly to the mA terminals.

Prerequisites

- ProLink III is installed and licensed on your PC
- One of the following:
  - RS-232 to Bell 202 signal converter
  - USB to Bell 202 signal converter
- An available serial port or USB port
- Adapters as required (for example, 9-pin to 25-pin)

Procedure

1. Attach the signal converter to the serial port or USB port on your PC.
2. To connect directly to the transmitter terminals:
   a. Remove the transmitter end-cap to access the wiring compartment.
   b. Connect the leads from the signal converter to terminals 1 and 2.

   Tip
   HART connections are not polarity-sensitive. It does not matter which lead you attach to which terminal.

   c. Add resistance as necessary to achieve at least one volt across the connection points.

   Important
   HART/Bell 202 connections require a voltage drop of 1 VDC. To achieve this, add resistance of 250–600 Ω to the connection.

Figure B-2: Connection to transmitter terminals

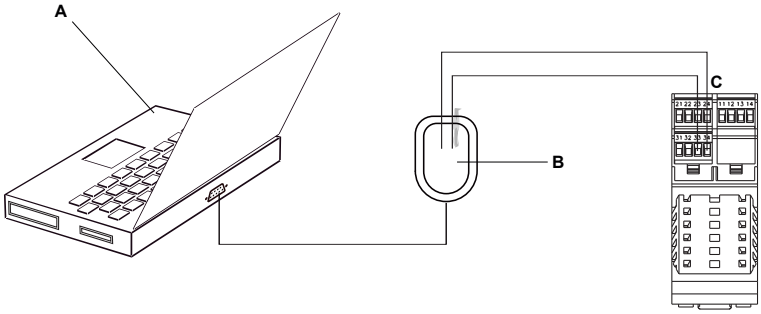

A. Computer
B. Signal converter
C. Transmitter

Note
This figure shows a serial port connection. USB connections are also supported.

3. To connect to a point in the local HART loop:
   a. Attach the leads from the signal converter to any point in the loop.
   b. Add resistance as necessary to achieve at least one volt across the connection points.

Important
HART/Bell 202 connections require a voltage drop of 1 VDC. To achieve this, add resistance of 250–600 Ω to the connection.

Figure B-3: Connection over local loop

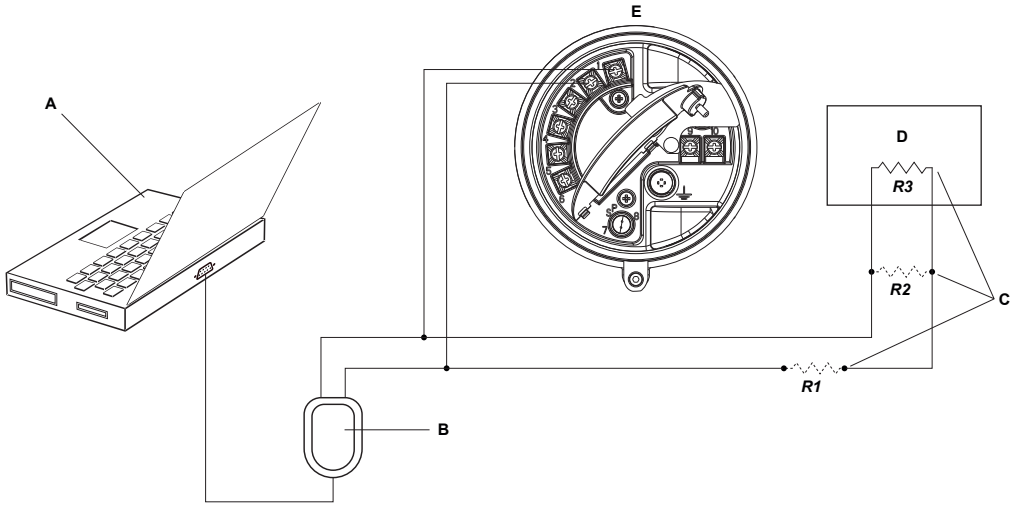

A. PC
B. Signal converter
C. Any combination of resistors R1, R2, and R3 as necessary to meet HART communication resistance requirements
D. DCS or PLC
E. Transmitter, with wiring compartment and power supply compartment opened

Note
This figure shows a serial port connection. USB connections are also supported.

4. To connect over a HART multidrop network:
   a. Attach the leads from the signal converter to any point on the network.
   b. Add resistance as necessary to achieve at least one volt across the connection points.

Important
HART/Bell 202 connections require a voltage drop of 1 VDC. To achieve this, add resistance of 250–600 Ω to the connection.

Figure B-4: Connection over multidrop network

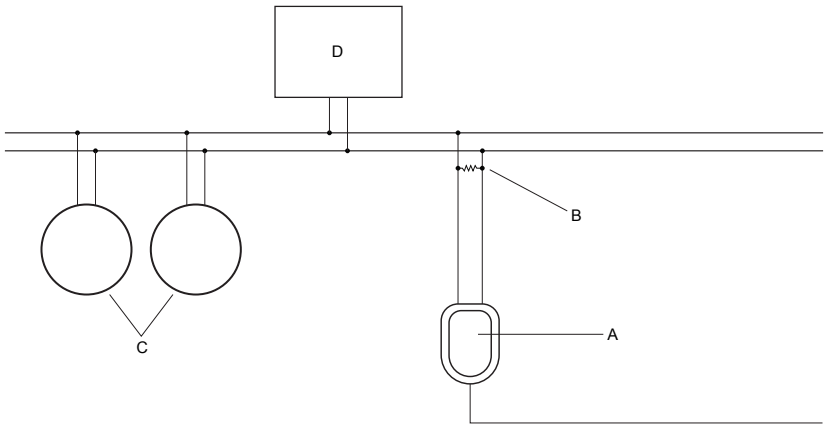

A. Signal converter
B. 250–600 Ω resistance
C. Devices on the network
D. Master device

5. Start ProLink III.
6. Choose **Connect to Physical Device**.
7. Set **Protocol** to HART Bell 202.

Tip
HART/Bell 202 connections use standard connection parameters. You do not need to configure them here.

8. If you are using a USB signal converter, enable **Toggle RTS**.
9. Set **Address/Tag** to the HART polling address configured in the transmitter.

Tips
- If this is the first time you are connecting to the transmitter, use the default address: 0.
- If you are not in a HART multidrop environment, the HART polling address is typically left at the default value.
- If you are unsure of the transmitter's address, click **Poll**. The program will search the network and return a list of the transmitters that it detects.

10. Set the **PC Port** value to the PC COM port that you are using for this connection.
11. Set **Master** as appropriate.

Option	Description
Secondary	Use this setting if a primary HART host such as a DCS is on the network.

Option	Description
Primary	Use this setting if no other primary host is on the network. The Field Communicator is a secondary host.

12. Click **Connect**.

Need help? If an error message appears:

- Verify the HART address of the transmitter, or poll HART addresses 1–15.
- Ensure that you have specified the correct port on your PC.
- Check the wiring between the PC and the transmitter.
- Increase or decrease resistance.
- Ensure that there is no conflict with another HART master. If any other host (DCS or PLC) is connected to the mA Output, temporarily disconnect the DCS or PLC wiring.

Appendix C
Using a Field Communicator with the transmitter

Topics covered in this appendix:

- *Basic information about the Field Communicator*
- *Connect with the Field Communicator*

C.1 Basic information about the Field Communicator

The Field Communicator is a handheld configuration and management tool that can be used with a variety of devices, including Micro Motion transmitters. It provides complete access to transmitter functions and data.

Field Communicator documentation

Most of the instructions in this manual assume that you are already familiar with the Field Communicator and can perform the following tasks:

- Turn on the Field Communicator
- Navigate the Field Communicator menus
- Send configuration data to the device
- Use the alpha keys to enter information

If you are unable to perform these tasks, consult the Field Communicator manual before attempting to use the Field Communicator. The Field Communicator manual is available on the documentation CD or at *www.emerson.com*.

Device descriptions (DDs)

In order for the Field Communicator to work with your device, the appropriate device description (DD) must be installed: 2000CMass flo, Dev v8, DD v1

To view the device descriptions that are installed on your Field Communicator:

1. At the HART application menu, press **Utility** > **Available Device Descriptions**.
2. Scroll the list of manufacturers and select **Micro Motion**, then scroll the list of installed device descriptions.

If **Micro Motion** is not listed, or you do not see the required device description, use the Field Communicator Easy Upgrade Utility to install the device description, or contact customer support.

Field Communicator menus and messages

Many of the menus in this manual start with the On-Line menu. Ensure that you are able to navigate to the On-Line menu.

As you use the Field Communicator with a Micro Motion transmitter, you will see a number of messages and notes. This manual does not document all of these messages and notes.

Important

The user is responsible for responding to messages and notes and complying with all safety messages.

Field Communicator with PVR, TBR, TMR, and fuel consumption applications

Production Volume Reconciliation (PVR), Transient Bubble Remediation (TBR), Transient Mist Remediation (TMR), and fuel consumption are available only over HART with HART 7 enabled (default).

C.2 Connect with the Field Communicator

A connection from the Field Communicator to your transmitter allows you to read process data, configure the transmitter, and perform maintenance and troubleshooting tasks.

You can connect the Field Communicator to the primary mA terminals on the transmitter, to any point in a local HART loop, or to any point in a HART multidrop network.

⚠ CAUTION!

If the transmitter is in a hazardous area, do not connect the Field Communicator to the mA terminals on the transmitter. This connection requires opening the wiring compartment, and opening the wiring compartment in a hazardous area can cause an explosion.

Prerequisites

The following HART device description (DD) must be installed on the Field Communicator: 2000CMass flo, Dev v8, DD v1.

Procedure

1. To connect to the transmitter terminals:
   a. Remove the cover from the wiring compartment.
   b. Attach the leads from the Field Communicator to terminals 1 and 2 on the transmitter and add resistance as required.

      The Field Communicator must be connected across a resistance of 250–600 Ω.

      Tip

      HART connections are not polarity-sensitive. It does not matter which lead you attach to which terminal.

Figure C-1: Field Communicator connection to transmitter terminals

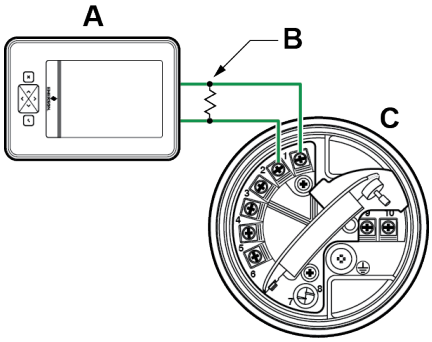

A. Field Communicator
B. 250–600 Ω resistance
C. Transmitter, with wiring compartment and power supply compartment opened

2. To connect to a point in the local HART loop, attach the leads from the Field Communicator to any point in the loop and add resistance as necessary.

   The Field Communicator must be connected across a resistance of 250–600 Ω.

Figure C-2: Field Communicator connection to local HART loop

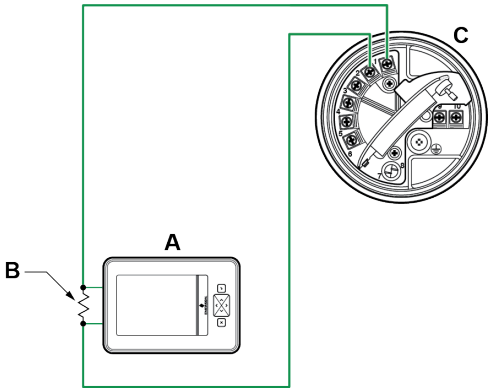

A. Field Communicator
B. 250–600 Ω resistance
C. Transmitter, with wiring compartment and power supply compartment opened

3. To connect to a point in the HART multidrop network, attach the leads from the Field Communicator to any point on the network.

Figure C-3: Field Communicator connection to multidrop network

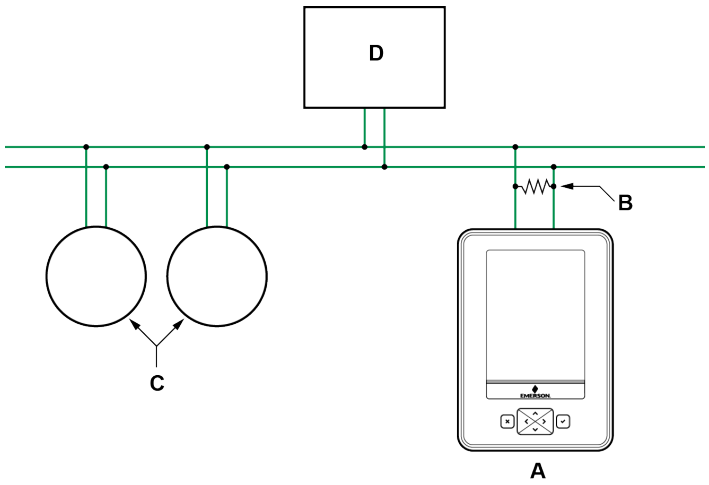

A. Field Communicator
B. 250–600 Ω resistance
C. Devices on the network
D. Master device

4. Turn on the Field Communicator and wait until the main menu is displayed.
5. If you are connecting across a multidrop network:
   - Set the Field Communicator to poll. The device returns all valid addresses.
   - Enter the HART address of the transmitter. The default HART address is 0. However, in a multidrop network, the HART address has probably been set to a different, unique value.

Postrequisites

To navigate to the Online menu, choose **HART Application** > **Online**. Most configuration, maintenance, and troubleshooting tasks are performed from the Online menu.

Tip

You may see messages related to the DD or active alerts. Press the appropriate buttons to ignore the message and continue.

Need help?

The Field Communicator requires a minimum of 1 VDC across the connection leads to communicate. If necessary, increase the resistance at the connection point until 1 VDC is achieved.

Appendix D
Default values and ranges

D.1 Default values and ranges

The default values and ranges represent the typical factory transmitter configuration. Depending on how the transmitter was ordered, certain values may have been configured at the factory and are not represented in the default values and ranges.

Table D-1: Transmitter default values and ranges

Type	Parameter	Default	Range	Comments
Flow	Flow direction	Forward		
	Flow damping	0.8 sec(1)	0.0 – 51.2 sec	User-entered value is corrected to the nearest valid value in list of preset values.In Special mode, the preset values are 1/5 normal. For gas applications, a minimum value of 2.56 is recommended. The 2.56 value will be automatically rounded up to 3.2 seconds.
	Flow calibration factor	1.00005.13		For sensors, this value represents the FCF and FT factors concatenated.
	Mass flow units	g/s		
	Mass flow cutoff	Sensor-specific value set at factory		For most sensors, the typical setting is 0.05% to 0.10% of the sensor's rated maximum flow rate. For some sensors, the setting may be higher. For some applications, such as empty-full-empty batching, a higher value is recommended. Contact MMI customer service for assistance.
	Volume flow type	Liquid		
	Volume flow units	L/s		
	Volume flow cutoff	0/0 L/s	0.0 – x L/s	x is obtained by multiplying the flow calibration factor by 0.2, using units of L/s.
Meter factors	Mass factor	1		
	Density factor	1		

Table D-1: Transmitter default values and ranges *(continued)*

Type	Parameter	Default	Range	Comments
	Volume factor	1		
Density	Density damping	1.6 sec	0.0 – 51.2 sec	User-entered value is corrected to nearest valid value in a list of preset values.
	Density units	g/cm^3		
	Density cutoff	0.2 g/cm^3	0.0 – 0.5 g/cm^3	
	D1	0 g/cm^3		
	D2	1 g/cm^3		
	K1	1000 µsec	1000 – 50,000 µsec	
	K2	50,000 µsec	1000 – 50,000 µsec	
	FD	0		
	Temp Coefficient	4.44		
Two-phase flow	Two-phase flow low limit	0.0 g/cm^3	0.0 – 10.0 g/cm^3	
	Two-phase flow high limit	5.0 g/cm^3	0. 0 – 10.0 g/cm^3	
	Two-phase duration	0.0 sec	0.0 – 60.0 sec	
Temperature	Temperature damping	4.8 sec	0.0 – 38.4 sec	User-entered value is corrected to nearest valid value in a list of preset values.
	Temperature units	Deg C		
	Temperature calibration factor	1.00000T0.0000		
Pressure	Pressure units	PSI		
	Flow factor	0		
	Density factor	0		
	Cal pressure	0		
T-Series sensor	D3	0 g/cm^3		
	D4	0 g/cm^3		
	K3	0 µsec		
	K4	0 µsec		
	FTG	0		
	FFQ	0		
	DTG	0		
	DFQ1	0		
	DFQ2	0		

Table D-1: Transmitter default values and ranges *(continued)*

Type	Parameter	Default	Range	Comments
Special units	Base mass unit	g		
	Base mass time	sec		
	Mass flow conversion factor	1		
	Base volume unit	L		
	Base volume time	sec		
	Volume flow conversion factor	1		
Variable mapping	Primary variable	Mass flow		
	Secondary variable	Density		
	Tertiary variable	Mass flow		
	Quaternary variable	Volume flow		
mA Output 1	Primary variable	Mass flow		
	LRV	–200.00000 g/s		
	URV	200.00000 g/s		
	AO cutoff	0.00000 g/s		
	AO added damping	0.00000 sec		The user-entered value is corrected down to the nearest lower value in a list of preset values.
	LSL	–200 g/s		Read-only. LSL is calculated based on the sensor size and characterization parameters.
	USL	200 g/s		Read only. USL is calculated based on the sensor size and characterization parameters.
	MinSpan	0.3 g/s		Read-only.
	Fault action	Downscale		
	AO fault level – downscale	2.0 mA	1.0 – 3.6 mA	
	AO fault level – upscale	22 mA	21.0 – 24.0 mA	
	Last measured value timeout	0.00 sec		
mA Output 2	Secondary variable	Density		
	LRV	0.00 g/cm3		
	URV	10.00 g/cm3		
	AO cutoff	Not-A-Number		
	AO added damping	0.00000 sec		

Table D-1: Transmitter default values and ranges *(continued)*

Type	Parameter	Default	Range	Comments
	LSL	0.00 g/cm^3		Read-only. LSL is calculated based on the sensor size and characterization parameters.
	USL	10.00 g/cm^3		Read only. USL is calculated based on the sensor size and characterization parameters.
	MinSpan	0.05 g/cm^3		Read-only.
	Fault action	Downscale		
	AO fault level – downscale	2.0 mA	1.0 – 3.6 mA	
	AO fault level – upscale	22 mA	21.0 – 24.0 mA	
	Last measured value timeout	0.00 sec		
LRV	Mass flow rate	−200.000 g/s		
	Volume flow rate	−0.200 L/s		
	Density	0.000 g/cm^3		
	Temperature	−240.000 °C		
	Drive gain	0.000%		
	Gas standard volume flow rate	−423.78SCFM		
	External temperature	−240.000 °C		
	External pressure	0.000 psi		
URV	Mass flow rate	200.000 g/s		
	Volume flow rate	0.200 L/s		
	Density	10.000 g/cm^3		
	Temperature	450.000 °C		
	Drive gain	100.000%		
	Gas standard volume flow rate	423.78 SCFM		
	External temperature	450.000 °C		
	External pressure	100.000 psi		
Frequency Output	Tertiary variable	Mass flow		
	Frequency factor	1,000.00 Hz	0.001 – 10,000 Hz	
	Flow rate factor	1000 kg/min		
	Scaling method	Freq=Flow	0 or 0.5 – 277.5 ms	
	Frequency fault action	Downscale		
	Frequency fault level – upscale	15,000 Hz	10.0 – 15,000 Hz	

Table D-1: Transmitter default values and ranges *(continued)*

Type	Parameter	Default	Range	Comments
	Frequency Output polarity	Active high		
	Last measured value timeout	0.0 seconds	0.0 – 60.0 sec	
Discrete Output 1	Source	Flow direction		
	Fault Indicator	None		
	Power	Internal		
	Polarity	Active high		
Discrete Output 2	Source	Flow switch		
	Polarity	Active high		
Discrete Input	Actions	None		
	Polarity	Active low		
Display	Backlight on/off	On		
	Refresh rate	200 milliseconds	100 – 10,000 milliseconds	
	Variable 1	Mass flow rate		
	Variable 2	Mass total		
	Variable 3	Volume flow rate		
	Variable 4	Volume total		
	Variable 5	Density		
	Variable 6	Temperature		
	Variable 7	Drive gain		
	Variable 8–15	None		
	Display totalizer start/stop	Disabled		
	Display totalizer reset	Disabled		
	Display auto scroll	Disabled		
	Display offline menu	Enabled		
	Display offline password	Disabled		
	Display alarm menu	Enabled		
	Display acknowledge all alarms	Enabled		
	Offline password	1234		
	Auto scroll rate	10 sec		
Digital communications	Fault action	None		
	Fault timeout	0 seconds	0.0 – 60.0 sec	
	Double-precision byte order	1-2-3-4-5-6-7-8		

(1) In Special mode, the default value is 0.64 sec.

Appendix E
Transmitter components and installation wiring

Topics covered in this appendix:

- *Installation types*
- *Power supply terminals and ground*
- *Input/output (I/O) wiring terminals*

E.1 Installation types

The transmitter was ordered and shipped to be installed in one of several possible configurations.

Figure E-1: Integral installation

The transmitter is mounted directly to the sensor. Integral installations do not require separate transmitter installation. Power supply and I/O must be field wired to the transmitter.

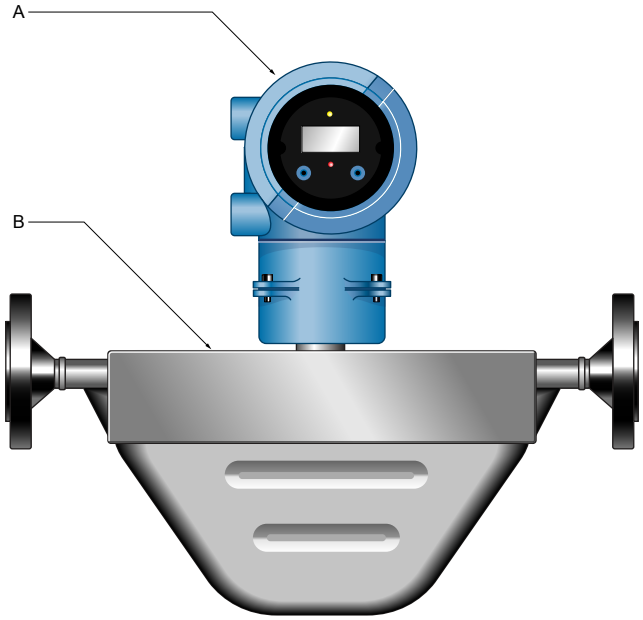

A. Transmitter
B. Sensor

Figure E-2: High-temperature meters with factory connection

The transmitter is shipped with a flexible connection factory installed between the sensor and the transmitter. The transmitter must be dismounted from its shipping location (spot-welded to the sensor case) and then mounted separately. Power supply and I/O must be field wired to the transmitter.

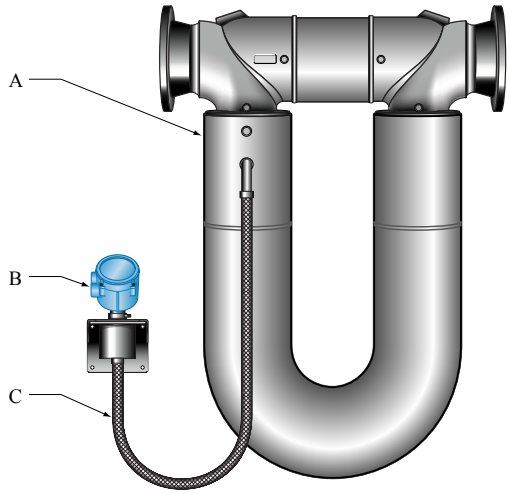

A. Sensor
B. Transmitter or core processor
C. Factory-installed flexible connection

Figure E-3: 4-wire remote installation for Coriolis meters

The transmitter is installed remotely from the sensor. The 4-wire connection between the sensor and transmitter must be field wired. Power supply and I/O must be field wired to the transmitter.

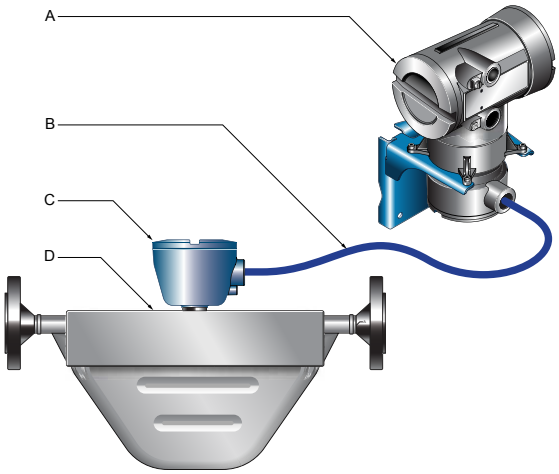

A. Transmitter
B. Field-wired 4-wire connection
C. Core processor
D. Sensor

Figure E-4: Remote core processor with remote sensor installation

The transmitter, core processor, and sensor are all mounted separately. The 4-wire connection between the transmitter and core processor must be field wired. The 9-wire connection between the core processor and the sensor must be field wired. Power supply and I/O must be field wired to the transmitter. This configuration is sometimes called double-hop.

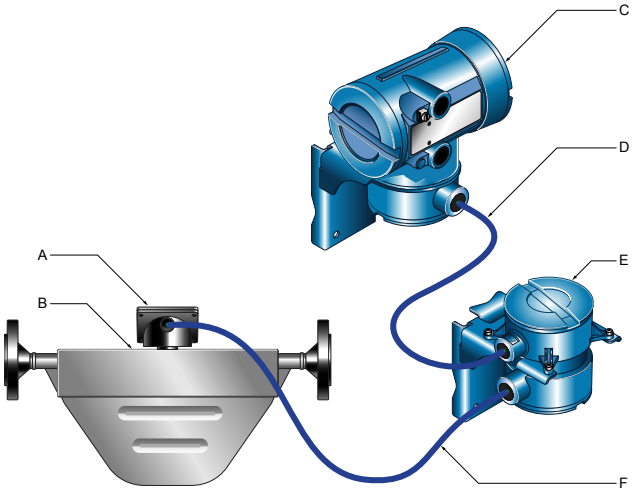

A. Junction box
B. Sensor
C. Transmitter
D. Field-wired 4-wire connection
E. Core processor
F. Field-wired 9-wire connection

E.2 Power supply terminals and ground

Figure E-5: Power supply wiring terminals

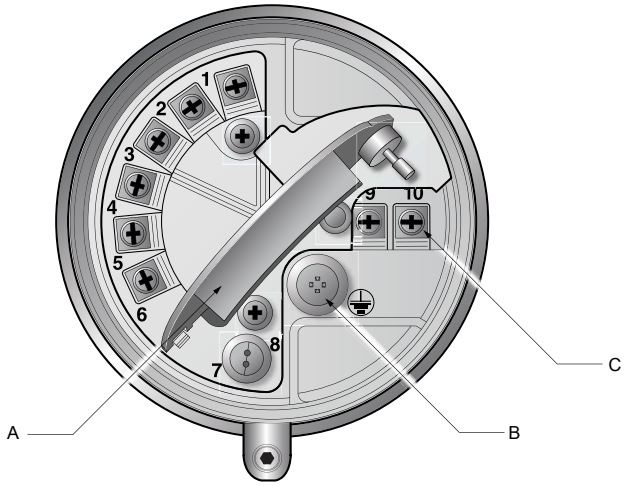

A. Warning flap
B. Equipment ground
C. Power supply wiring terminals (9 and 10)

E.3 Input/output (I/O) wiring terminals

Figure E-6: I/O wiring terminals

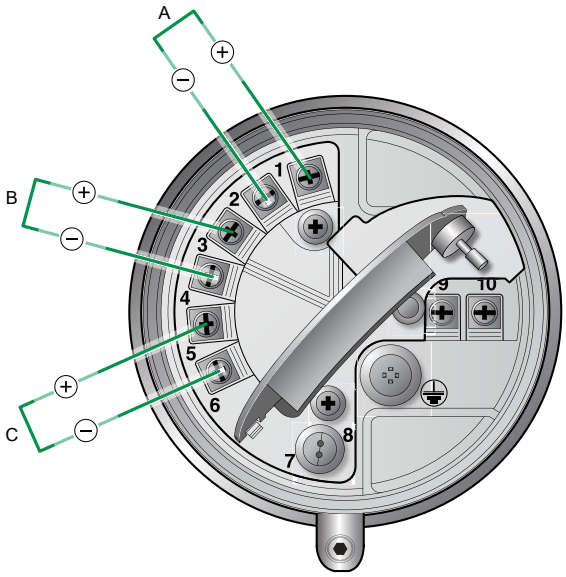

A. mA/HART
B. mA Output, Frequency Output, or Discrete Output
C. Frequency Output, Discrete Output, or Discrete Input

Appendix F
NE 53 history

F.1 NE 53 history

Important
Not all features and capabilities described in this section may apply to your transmitter or configuration.

August 2000, Version 1.x

Modification type	Change
Expansion	Added writing of the device tag using Modbus
Adjustment	Improved communication handling with the HART Tri-Loop product
Feature	Indication of outputs option board type appears on display at power-up

May 2001, version 2.x

Modification type	Change
Expansion	• Added alarm A106 to indicate that HART burst mode is enabled • Indication of outputs option board type appears on display at power-up • Added alarm A106 to indicate that HART burst mode is enabled • Control of HART burst mode now available via Modbus • Added support for the Model 1700 transmitter • Added support for the intrinsically safe transmitter option • Added support to configure the process variable units for mass flow, volume flow, density and temperature from the display • Added support for assigning process variables to the mA and Frequency Output from the display
Adjustment	Clarified the interaction of the digital fault setting and the fault timeout (last measured value timeout)
Feature	• Drive gain can be assigned to mA Output • Pressure compensation added via HART • Channel B can be configured as a Discrete Output

December 2001, version 3.x

Modification type	Change
Expansion	• Added support for the configurable I/O option board • Software version information available via the display or Modbus • Configurable density cutoff • Additional HART variables can be assigned to QV • The display start/stop totalizers function can be enabled or disabled • Petroleum measurement application improvements • Live zero available as display variable • Increased options for fault output settings • New cryogenic application temperature algorithms
Adjustment	• Improved Frequency Output stability and unit conversions • Improved the handling of volume flow rate when two-phase flow is detected • Improved handling of density values and calibrations during fault conditions • Display configuration, screen flow and optical switch changes • HART communication and burst mode improvements
Feature	• Petroleum measurement application added • Custody transfer option added to the configurable I/O option board • HART polling for external pressure/temperature added

June 2003, version 4.x

Modification type	Change
Expansion	• Added support for the Model 1500 transmitter • Additional variables displayed by the Model 1700 transmitter
Adjustment	• Improved the handling of certain alarm conditions • Clarified the behavior of certain Modbus calibration coils • Clarified the interaction between certain density measurement units and density cutoff values • Improved the handling of the mA source setting via the display • Improvements to pressure and temperature polling • HART Tri-Loop and other communication improvements • Clarified the value returned by Modbus scaled integer registers during a fault condition
Feature	Discrete values now available through Modbus

September 2006, version 5.x

Modification type	Change
Expansion	• Discrete Output assignable as a flow switch • Discrete Output fault indication configurability • Discrete Input support for multiple action assignments • Added support for querying the display LED status via Modbus • Additional HART and Modbus commands • Process comparator expanded to five configurable events • Factory configuration restore function • Factory zero restore function • Alarm history expanded • Selectable write protection for configuration data • Expanded selection of source assignments for mA Output • Expanded storage of mA range values • Expanded custody transfer application for independent implementation of NTEP and OIML compliance
Adjustment	Display improvements for floating-point data
Feature	• Configurable alarm severity • Gas standard volume functionality • Meter verification availability as an option • Multiple display language selections

September 2009, version 6.x

Modification type	Change
Expansion	• Frequency Output configurable as Discrete Output on Series 1000 transmitters • Discrete Output assignable as flow switch on Series 1000 transmitters • Display Variable 1 optionally fixed to process variable assigned to primary mA Output • Frequency Output scaling method and related parameters configurable from display • For enhanced density and petroeum measurement process variables, display cycles among variable name, current value and unit, and reference temperature
Adjustment	• mA Output Fault Action = None and Digital Communications Fault Action = NAN is no longer allowed • Frequency Output Fault Action = None and Digital Communications Fault Action = NAN is no longer allowed • Display variables set to a volume process variable automatically switch between liquid and GSV, according to current setting of Volume Flow Type

Modification type	Change
Feature	• Configurable hysteresis for flow switch • Field Verification Zero added to support Weights & Measures application • Transmitter firmware checksum and core processor firmware checksum assignable as display variables and viewable in ProLink

February 2018, version 8.x

Modification type	Change
Expansion	• Polling an external device for base density Gas Standard Volume (GSV) • NE 53 version added to the display and accessed using Modbus and HART • Improved data update rate for Advanced Zero Check using ProLink III • Byte order configuration for double totals • Modbus Funtion 43 basic objects for FDI identification • Fast access to Live Zero in 100 Hz mode • Display used to disable user access to the Smart Meter Verification menu. Once disabled, access can only be enabled using ProLink III or a HART device

Modification type	Change
Adjustment	• Sensors that are not straight tube sensors are now correctly identified • The mA Output fixed alert is now set • The Factory Configuration Invalid status bit is now set correctly when connected to a 700 core processor — as the 700 core processor does not support saving and restoring the factory configuration • Enabling a new feature on a flow-only device does not reset the output configuration to factory defaults • Polled variables are now converted to the transmitter units before being used • HART Primary, Secondary, and Tertiary Variables can be changed using HART when the transmitter is configured for gas standard volume • Petroleum measurement variables are removed from the display when petroleum measurement is disabled • The mA Output can be fixed when assigned to a concentration measurement, petroleum measurement, or GSV variable when the transmitter is not connected to a core processor • The units for concentration curve data are correctly converted when the data is entered using HART • Meter verification failed and aborted alerts are now reflected in the HART More Status flag • The HART Squawk command is functional when the HART write protect is enabled • Locking the transmitter, unlocking the transmitter, or changing write protection does not set the HART Configuration Changed flag • If connected to a 700 core processor with software version 3.1 or earlier, there is no longer a core processor write failed alert when setting volume flow units to beer barrels per time unit • The factory zero value is immediately updated from the core processor after running a zero calibration and saving the factory configuration • A firmware upgrade done without clearing non-volatile memory no longer causes an EEPROM Failure alert • The status bit for the undefined A141 alert (Device Data Capture Triggered) no longer appears in the Modbus status register • When using AMS to configure the transmitter: - Changing the output configuration for mA 1, mA 2, or the Frequency Output, does not change the configuration of all three outputs - mA configuration methods can be cancelled - Density and temperature units display on the concentration measurement configuration page

Modification type	Change
	- An AMS `Field Device did not respond` message no longer displays when the concentration offset is configured even though the value was changed - When the volume flow type is changed, the new setting is updated from the transmitter without having to rescan the device
Feature	• Basic meter verification • Production Volume Reconciliation (PVR) • Transient Mist Remediation (TMR) • Transient Bubble Remediation (TBR) • Piecewise Linearization for Gas • Fuel consumption • Support for Micro Load

MMI-20019053
Rev AB
2018

Micro Motion Inc. USA
Worldwide Headquarters
7070 Winchester Circle
Boulder, Colorado USA 80301
T +1 303-527-5200
T +1 800-522-6277
F +1 303-530-8459
www.emerson.com

Micro Motion Europe
Emerson Automation Solutions
Neonstraat 1
6718 WX Ede
The Netherlands
T +31 (0) 70 413 6666
F +31 (0) 318 495 556
www.micromotion.nl

Micro Motion Asia
Emerson Automation Solutions
1 Pandan Crescent
Singapore 128461
Republic of Singapore
T +65 6777-8211
F +65 6770-8003

Micro Motion United Kingdom
Emerson Automation Solutions
Emerson Process Management Limited
Horsfield Way
Bredbury Industrial Estate
Stockport SK6 2SU U.K.
T +44 0870 240 1978
F +44 0800 966 181

Micro Motion Japan
Emerson Automation Solutions
1-2-5, Higashi Shinagawa
Shinagawa-ku
Tokyo 140-0002 Japan
T +81 3 5769-6803
F +81 3 5769-6844

©2018 Micro Motion, Inc. All rights reserved.

The Emerson logo is a trademark and service mark of Emerson Electric Co. Micro Motion, ELITE, ProLink, MVD and MVD Direct Connect marks are marks of one of the Emerson Automation Solutions family of companies. All other marks are property of their respective owners.

MICRO MOTION

EMERSON